REC. OUTPUT & REP. EQUALIZER AMPLIFIER P.C. BOARD ASSY (PA-286A)

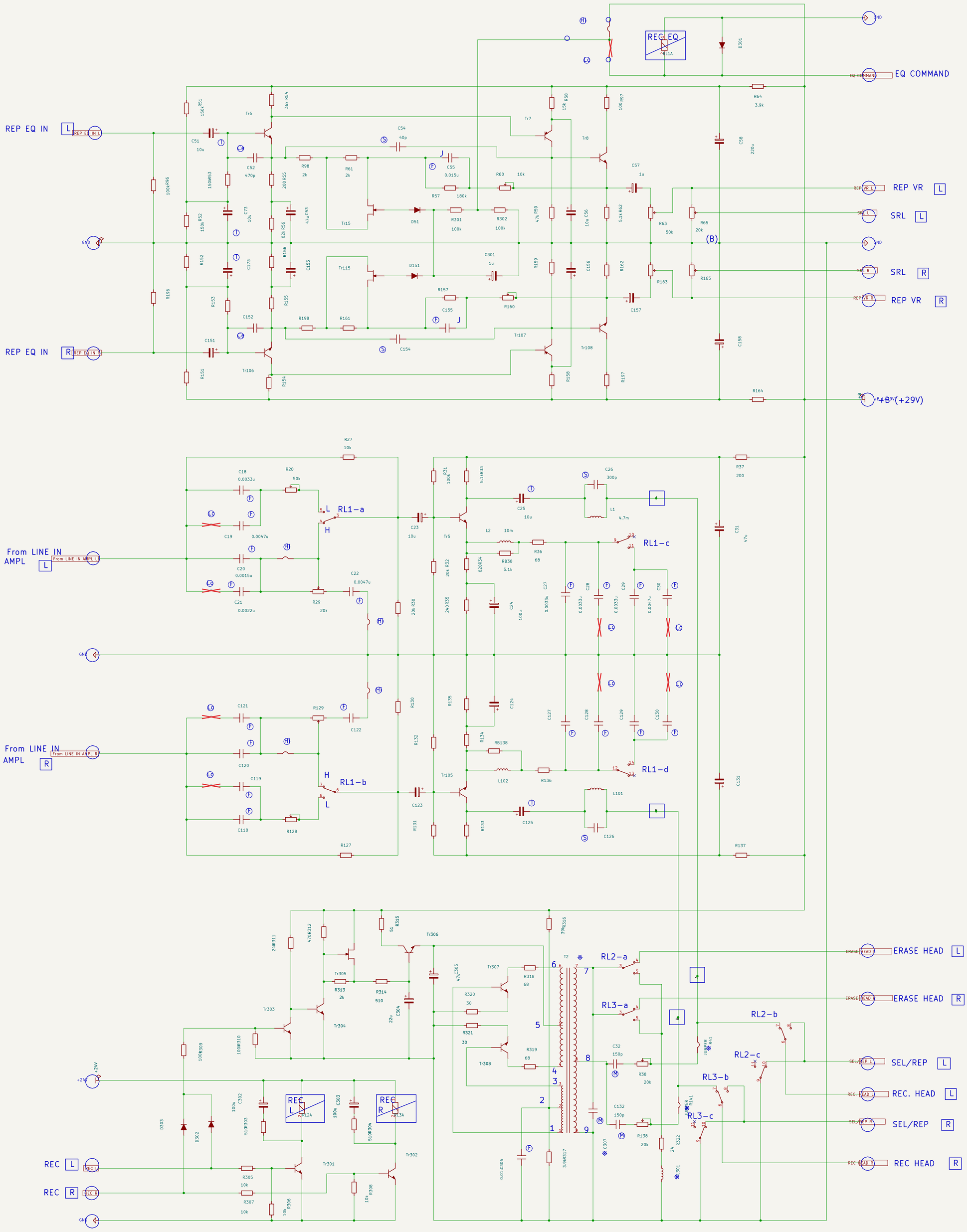

NOTES 1. UNLESS OTHERWISE INDICATED :

ALL RESISTORS VALUES ARE IN OHM, $\frac{1}{4}$WATT, 5%

ALL CAPACITORS VALUES ARE IN FARADS, 10%

2. LETTER SYMBOLS ARE FOLLOWS :

Ⓜ : MICA FILM CAPACITOR

Ⓣ : TANTALUM ELE. CAPACITOR

Ⓢ : POLYSTYLENE CAPACITOR

Ⓕ : MYLAR FILM CAPACITOR

Ⓒe : CERAMIC CAPACITOR

J : TOLELANCE 5%

Ⓗi : Jumped on High Speed Models

Ⓛo : Jumped on Low Speed Models

3. TRANSISTORS ARE FOLLOWS

Tr 307, 308	: 2SC1211
Tr 6, 106, 8, 108	: 2SC644
Tr 7, 107	: 2SA666
Tr 306	: 2SC1384
Tr 301, 302	: 2SC373
Tr 303, 304, 5, 105	: 2SC828A
Tr 305	: 2SK34(C)
Tr 15, 115	: 2SK34(D)

4. POTENTIOMETERS ARE FOLLOWS

R60, 160 : REP. EQ. ADJ.

R63, 163 : MAX. REP. LEVEL ADJ.

R65, 165 : SRL ADJ.

R28, 128 : REC. EQ. (Low speed) ADJ.

R29, 129 : REC. EQ. (High speed) ADJ.

R38, 138 : REC BIAS CURRENT ADJ.

5. DIFFERENCE ON BOTH MODELS

※	2S, 2SD	4S, 4SD
T2	ET-51-177	ET-51-112
C307	0.01μ/500	0.003μ/500
L301	0.68mH	1.8mH
R41,141	0Ω(short)	10kΩ