MX-5050 SERIES PROFESSIONAL RECORDER

INTRODUCTION

This manual supplement provides detailed maintenance information, schematics, and parts lists for the Otari MX–5050 Series Models $2SD_2$, QXD, ½QXD and 8SD Professional Recorder. For descriptive information, installation and operating instructions, preventive maintenance and routine adjustment procedures, refer to Otari Instruction Manual Catalog No. OIM–1004E.

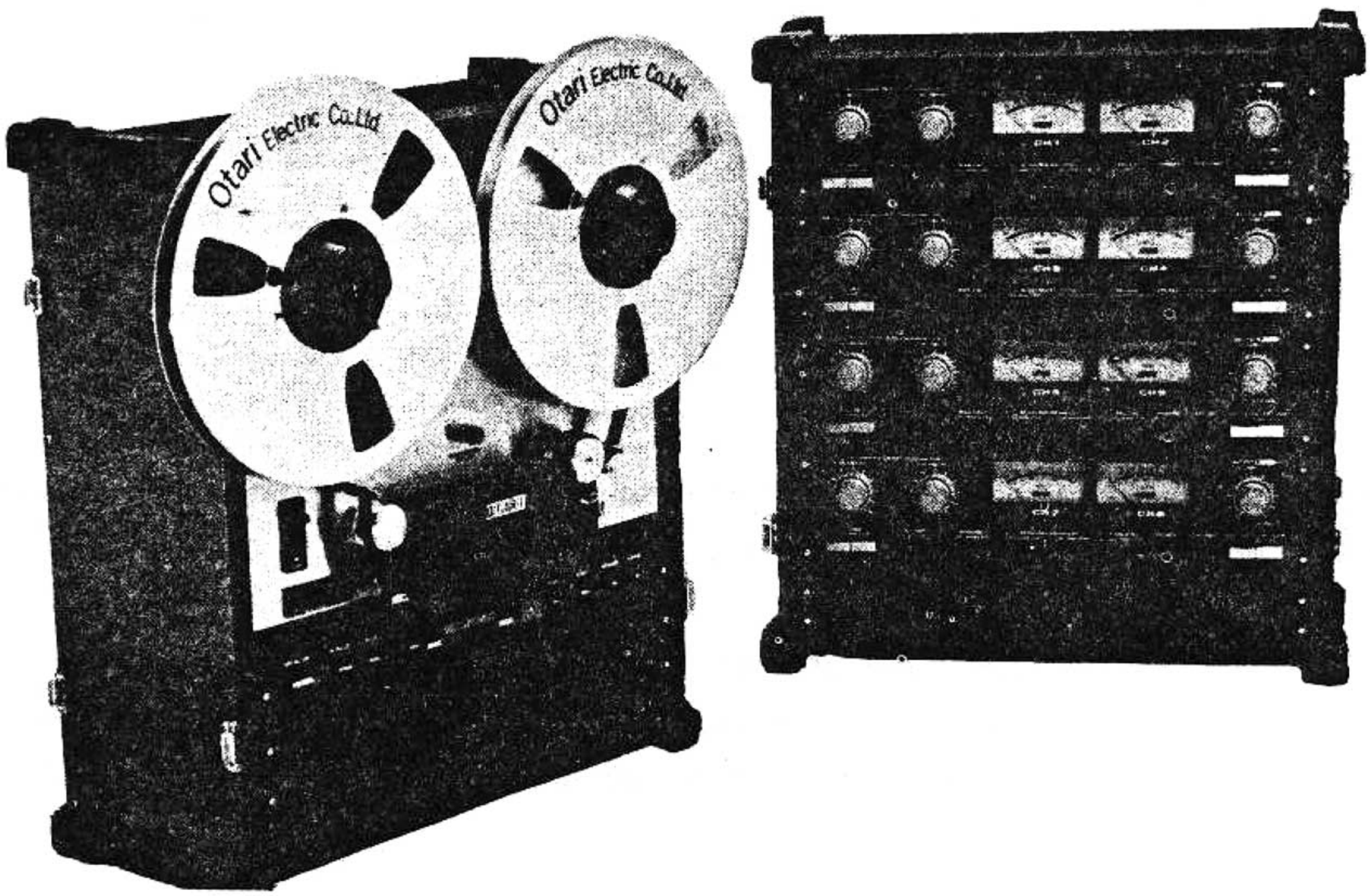

MX–5050 8SD Recorder
(8-Channel Version in Standard Portable Case)

COMMUNICATION WITH OTARI
—FOR SERVICE INFORMATION AND PARTS—

The OTARI PRODUCTS are manufactured under strict quality control and each unit was carefully tested and inspected prior to shipment from our factory.

If, however, some adjustments or technical support become necessary, replacement parts are required, or technical questions arise, please contact your nearest Otari dealer or write to:

OTARI ELECTRIC CO., LTD.

4–29–18, Minami Ogikubo,
Suginamiku, Tokyo, 167, Japan
Phone: (03) 333 – 9631
Telex No.: OTRDENKI J26604

OTARI CORPORATION

981 Industrial Road, San Carlos,
California 94070, U. S. A.
Phone: (415) 593 – 1648
Telex No.: TWX 910–376–4890

Another part of Otari continuous technical support program for our products, is the continuous revision of manuals as the equipment is improved or modified.

In order for you to receive our information and service applicable to your requirement, and for the technical support to function properly, please include the following information, most of which can be obtained from the name plate on the equipment.

1. Model Number
2. Serial Number
3. Date of purchase
4. Name and address of dealer from whom machine was purchased.
5. Power requirements (voltage and frequency)
6. Manual number which you are referring

www.hifiengine.com

TABLE OF CONTENTS

Section	Title	Page
1	GENERAL INFORMATION	
1–1	Test and Maintenance Equipment Requirements	1–1
1–2	Routine Maintenance	1–2
1–2–(1)	Cleaning	1–2–(1)
1–2–(2)	Demagnetizing	1–2–(2)
1–2–(3)	Lubrication	1–2–(3)
2	TAPE TRANSPORT MAINTENANCE	
2–1	Transport Access	2–1
2–2	Brake Adjustment	2–2
2–3	Tape Tension Adjustment	2–3
2–4	Capstan Pinch Roller Pressure Adjustment	2–4
2–5	Capstan Speed Adjustment	2–5
3	PERFORMANCE TESTS AND ELECTRONIC ALIGNMENT	
3–1	Test Equipment	3–1
3–2	Test Tapes	3–2
3–3	Test Conditions	3–3
3–4	Performance Tests	3–4
3–4–(1)	Overall Signal-to-Noise	3–4–(1)
3–4–(2)	Overall Distortion Test	3–4–(2)
3–4–(3)	Crosstalk Test	3–4–(3)
3–4–(4)	Erasure test	3–4–(4)
3–4–(5)	Tape Speed Measurement	3–4–(5)
3–4–(6)	Flutter and Wow Test	3–4–(6)
3–5	Electronic Alignment	3–5
3–5–(1)	Reproduce Alignment	3–5–(1)
3–5–(2)	Reproduce Head Azimuth Adjustment	3–5–(2)
3–5–(3)	Reproduce Equalization Adjustment	3–5–(3)
3–5–(4)	SRL Adjustment	3–5–(4)
3–6	Record and Bias System Adjustment	3–6
3–6–(1)	Bias Buffer Amplifier Adjustment	3–6–(1)
3–6–(2)	Bias Calibration	3–6–(2)
3–6–(3)	Record Head Azimuth Adjustment	3–6–(3)

www.hifiengine.com

3–6–(4) Record Level Adjustment . . . . . 3–6–(4)
3–6–(5) Record Level Calibration . . . . . 3–6–(5)
3–6–(6) Test Oscillator Level Calibration . . . . . 3–6–(6)
3–6–(7) SEL/REP Level Adjustment . . . . . 3–6–(7)
4 MAJOR COMPONENT REPLACEMENT PROCEDURES
4–1 Tape Transport 4–1
4–1–(1) Reel Table Replacement and Height Adjustment . . . . . 4–1–(1)
4–1–(2) Supply or Takeup Reel Motor Replacement . . . . . 4–1–(2)
4–1–(3) Power Transformer Replacement . . . . . 4–1–(3)
4–1–(4) Capstan Motor Replacement . . . . . 4–1–(4)
4–1–(5) Brake Band or Brake Solenoid Replacement . . . . . 4–1–(5)
4–1–(6) Pinch Roller Replacement . . . . . 4–1–(6)
4–2 Head Assembly Replacement 4–2
4–2–(1) For MX–5050–2SD$_2$ or QXD . . . . . 4–2–(1)
4–2–(2) For MX–5050–½QXD or 8SD . . . . . 4–2–(2)
4–2–(3) Access to Electronic Assembly . . . . . 4–2–(3)
4–3 Installation of Optional Transformer 4–3
4–3–(1) Installation of Input Transformer . . . . . 4–3–(1)
4–3–(2) Installation of Output Transformer . . . . . 4–3–(2)

5 TROUBLESHOOTING
5–1 Preliminary Procedures 5–1
5–2 Troubleshooting Hints 5–2

6 PARTS LISTS AND SCHEMATICS

www.hifiengine.com

List of Illustrations

Figure	Title	Page
1–1	Lifting Head Cover	1–2–(1)
1–2	Demagnetizing	1–2–(2)
1–3	Lubrication	1–2–(3)
2–1	Transport Access	2–1
2–2	Measurement	2–2
2–3	Adjusting Parts Location	2–2
2–4	Tape Tension Adjustment Resistors	2–3
2–5	Measurement	2–4
2–6	Adjusting Parts Location	2–4
2–7	Adjusting Parts Location	2–5
3–1	ASA "A" Weighted Filter	3–4–(1)
3–2	Using Test Tape	3–4–(5)
3–3	Adjusting Parts Location	3–5–(1)
3–4	Adjusting Parts Location	3–6
3–5	Bias Buffer Adjusting Parts	3–6–(4)
4–1	Reel Table and Motor	4–1–(1)
4–2	Capstar Motor Location	4–1–(4)
4–3	Brake Assembly Location	4–1–(5)
4–4	Pinch Roller Removal	4–1–(6)
4–5	Top View of Head Assembly	4–2–(1)
4–6	Front View of Head Assembly	4–2–(1)
4–7	Bottom View of Head Assembly	4–2–(1)
4–8	Head Alignment	4–2–(1)
4–9	Top View of Head Assembly	4–2–(2)
4–10	Front View of Head Assembly	4–2–(2)
4–11	Head Alignment	4–2–(2)
4–12	Input Circuity	4–3–(1)
4–13	Input Transformer Installation	4–3–(1)
4–14	Input Transformer Wiring	4–3–(1)
4–15	Output Circuitry	4–3–(2)
4–16	Output Transformer Installation	4–3–(2)
4–17	Output Transformer Wiring	4–3–(2)

www.hifiengine.com

List of Table

Table	Title	Page
1–1	Test and Maintenance Equipment	1–1
1–2	Flutter Test Tapes	1–1
1–3	Alignment Test Tapes	1–1
2–1	Tension Specifications	2–2
2–2	Tape Tesnion Specifications	2–3
3–1	Signal-to-noise Specifications (ASA weighted)	3–4–(1)
3–2	Crosstalk Specifications (Between Adjacent Channels)	3–4–(3)
3–3	Flutter and Wow Specification	3–4–(6)
5–1	Troubleshooting Hints	5–2

www.hifiengine.com

SECTION 1
GENERAL INFORMATION

This manual is a maintenance supplement to the MX–5050 Series Models $2SD_2$, QXD, ½QXD and 8SD Instruction Manual, Catalog No. OIM–1004E, and provides detailed maintenance information. This manual is intended for use by qualified maintenance or service personnel only. Prior to using this manual, it is suggested that the user become familiar with the information contained in the basic manual.

1–1 TEST AND MAINTENANCE EQUIPMENT REQUIREMENTS

All maintenance, electronic, and mechanical test equipment required during maintenance, alignment, and adjustment of the recorder is listed in Table 1–1. In addition, recommended maintenance periods are shown by accumulative hours of usage and/or elapsed period of time, whichever occurs first. Equivalent equipment can be substituted for the equipment suggested in the table.

Table 1–1. Test and Maintenance Equipment

EQUIPMENT TYPE	SUGGESTED MODEL	USED FOR	PERIOD
Head cleaner	Ampex 087–007	Cleaning heads and guides	8 hours
Isopropyl or denatured alcohol	Any	Cleaning capstan pinch-roller	8 hours
Q tips	Any	Cleaning heads and guides	8 hours
Head demagnetizer	Ampex 4010820	Demagnetizing heads and guides	8 hours
Lubricating oil	Ampex 087–579 or Mobile DTE Medium	Oiling of capstan motor and pinch roller bearings	1,000 hours or 6 months
Spring scales 0–16 oz, 0–32 oz and 0–10 lbs	Any	Mechanical adjustments	1,000 hours or 6 months
Vacuum cleaner and brushes	Any	General cleaning	1 month
Standard alignment test tapes	Refer to Table 1–2 and 1–3.	Reproduce amplifier alignment	150 hours or 1 month

Audio oscillator	Hewlett Packard H20–200CD	Overall frequency response and signal-to-noise measurement	150 hours or 1 month
AC Voltmeter (VTVM)	Hewlett Packard 400L or 400 FL	Same as above	Same as above
Bandpass filter	See text	Same as above	Same as above
Flutter bridge	Data Measurement Corp. 8100	Flutter and wow measurement	Same as above
Wave analyzer	Hewlett Packard 3590A or 310A	Distortion and crosstalk measurement	Same as above
Test cables	See text		
Technicians tools			
Stroboscope	General Radio 1531–AB	Mechanical adjustments	1,000 hours or 6 months
Volt-ohm meter	20,000 ohms/volt any brand	Test and adjustments	–
Allen wrenches	Metric		
ASA Noise Filter	See text and Fig. 3–1.	Signal-to-noise ratio measurement	150 hours or 1 month

Table 1–2. Flutter Test Tapes

TAPE WIDTH (INCHES)	SPEED (IN/S)	FREQUENCY (HZ)	AMPEX CATALOG NO.
1/4	3¾	3000	01-31336-01
1/4	7½	3000	01-31326-01
1/4	15	3000	01-31316-01
1/2	7½	3000	01-31326-05
1/2	15	3000	01-31316-05

www.hifiengine.com

Table 1–3. Alignment Test Tape

TAPE WIDTH (INCHES)	SPEED (IN/S)	EQUALIZATION (TIME CONSTANTS)	STANDARD	TRACKS	AMPEX CATALOG NO.
1/4	3-3/4	90 μs & 3180 μs	NAB	Full	4690037-01
	7-1/2	50 μs & 3180 μs	NAB	Full	01-31321-01
		50 μs & 3180 μs	NAB	1 & 3	01-31321-04
		70 μs & ∞	IEC	Full	4690014-01
	15	50 μs & 3180 μs	NAB	Full	01-31311-01
		35 μs & ∞	IEC	Full	01-31313-01
1/2	7-1/2	50 μs & 3180 μs	NAB	Full	01-31321-05
		70 μs & ∞	IEC	Full	4690015-01
	15	50 μs & 3180 μs	NAB	Full	01-31311-05
		35 μs & ∞	IEC	Full	01-31313-05

1–2 ROUTINE MAINTENANCE

It is important that routine maintenance be performed at the recommended intervals. External cleaning and demagetization procedures should be performed after each eight hours of operation, and the interior of the transport should be cleaned once a month. The lubrication procedure should be performed after 1,000 hours of operation or after 6 months, whichever comes first.

1–2–(1) CLEANING

Oxide particles from the magnetic tape tend to collect on components in the tape path and degrade performance of the recorder. To clean the head assembly, proceed as follows:

1. Lift the head cover as shown in Fig. 1–1.

CAUTION

WHEN CLEANING THE HEADS, USE ONLY THE RECOMMENDED SOLVENT (HEAD CLEANER) TO AVOID DAMAGING THE HEADS. KEEP THE HEAD CLEANER OFF PLASTIC FINISHES AND THE CAPSTAN PINCH ROLLER. DO NOT USE METAL TOOLS THAT CAN SCRATCH THE HEADS.

www.hifiengine.com

2. Clean each head stack thoroughly with a cotton-tipped applicator (Q tip) dampened with head cleaner.
3. Use isopropyl alcohol to clean all tape-guiding components, the capstan shaft, and the capstan pinch roller.

CAUTION

DO NOT USE HEAD CLEANER ON THE CAPSTAN PINCH ROLLER AS DAMAGE WILL RESULT AND TAPE WILL SLIP.

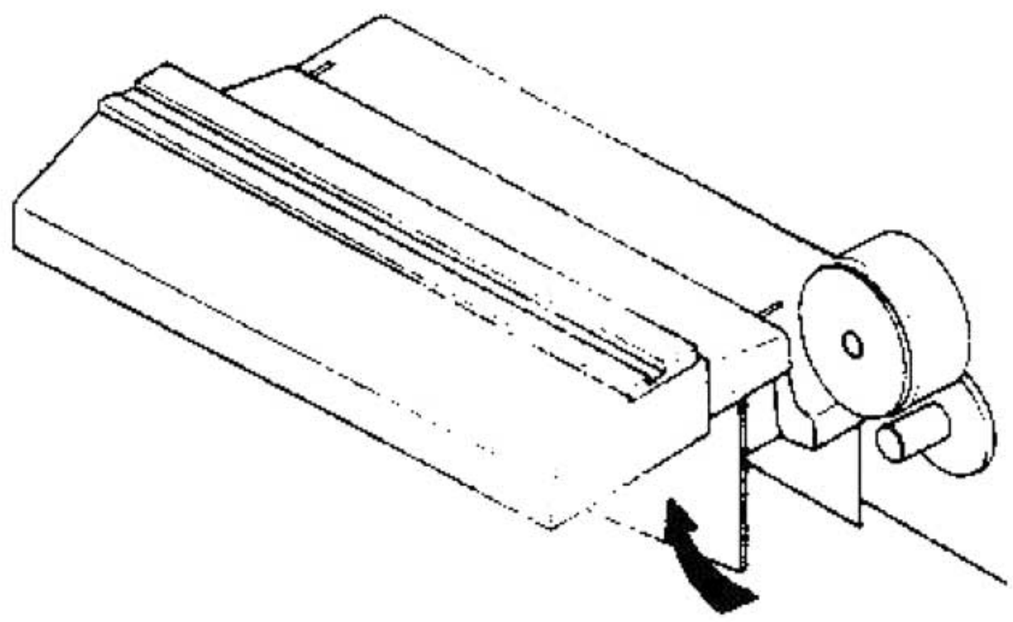

Fig. 1–1 Lifting Head Cover

4. Pull Down rear cover of recorder (4 screws).
5. Use a vacuum cleaner and a small brush to remove all dust or contamination from the interior of the transport. If necessary lightly moisten brush with isopropyl alcohol to clean parts.
6. Reinstall rear cover.

1–2–(2) DEMAGNETIZING

The heads and tape guiding components in the tape path should be demagnetized after each eight hours of operation. These components can acquire permanent magnetization that increases signal noise and distortion and partially erase high frequencies on recorded tape. Use a hand-held head demagnetizer to demagnetize all components in the tape path as follows:

www.hifiengine.com

1. Turn equipment power off and remove any recorded tape near the transport (tape could be partially erased by the demagnetizer).
2. Lift head cover as shown in Figure 1—1.
3. Cover the demagnetizer tips with adhesive tape to prevent scratching head stacks.
4. With the demagnetizer held away from the transport, connect demagnetizer to power source.
5. Move the demagnetizer tips slowly close to the head, lightly touch the demagnetizer tips to the face of one head stack and slowly move the tips up and down the stack several times. Then slowly withdraw the demagnetizer as shown in Fig. 1—2.
6. Repeat step 5 for each head stack.
7. Repeat the motions of step 5 for each guide and other metallic parts in the tape path.
8. Move the demagnetizer slowly away from the transport for at least three feet and then disconnect power from the demagnetizer.

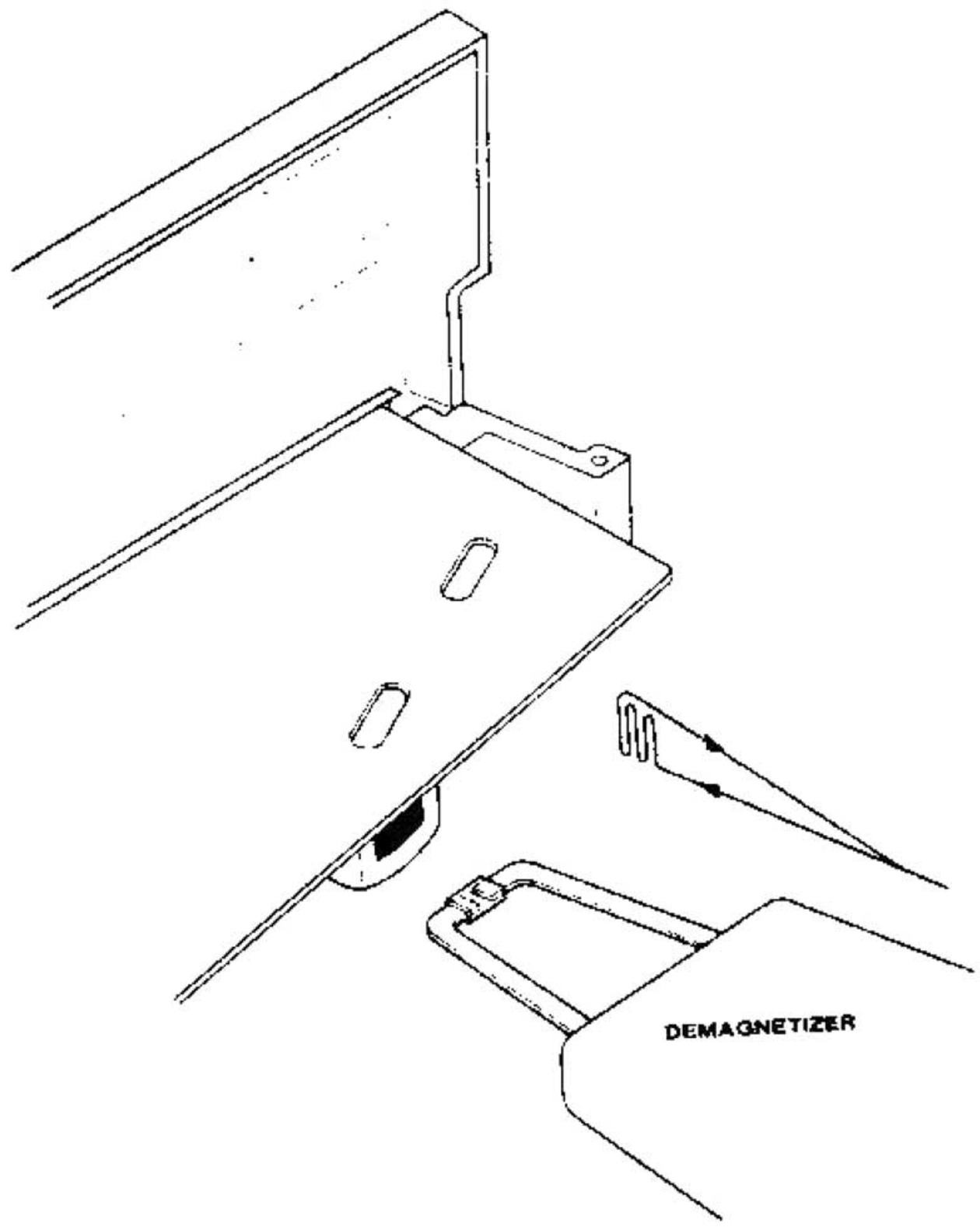

Fig. 1—2 Demagnetizing

www.hifiengine.com

1–2–(3) LUBRICATION

The only components requiring lubricaiton are the capstan sleeve bearing and the capstan pinch roller bearings. See Fig. 1–3 and proceed as follows:

CAUTION

BE CERTAIN TO CLEAN CAPSTAN SHAFT THOROUGHLY. THE LUBRICATING OIL CAN RUIN THE CAPSTAN PINCH ROLLER AND MAGNETIC TAPE. CLEAN THE CAPSTAN AND PINCH ROLLER WITH ISOPROYL ALCOHOL.

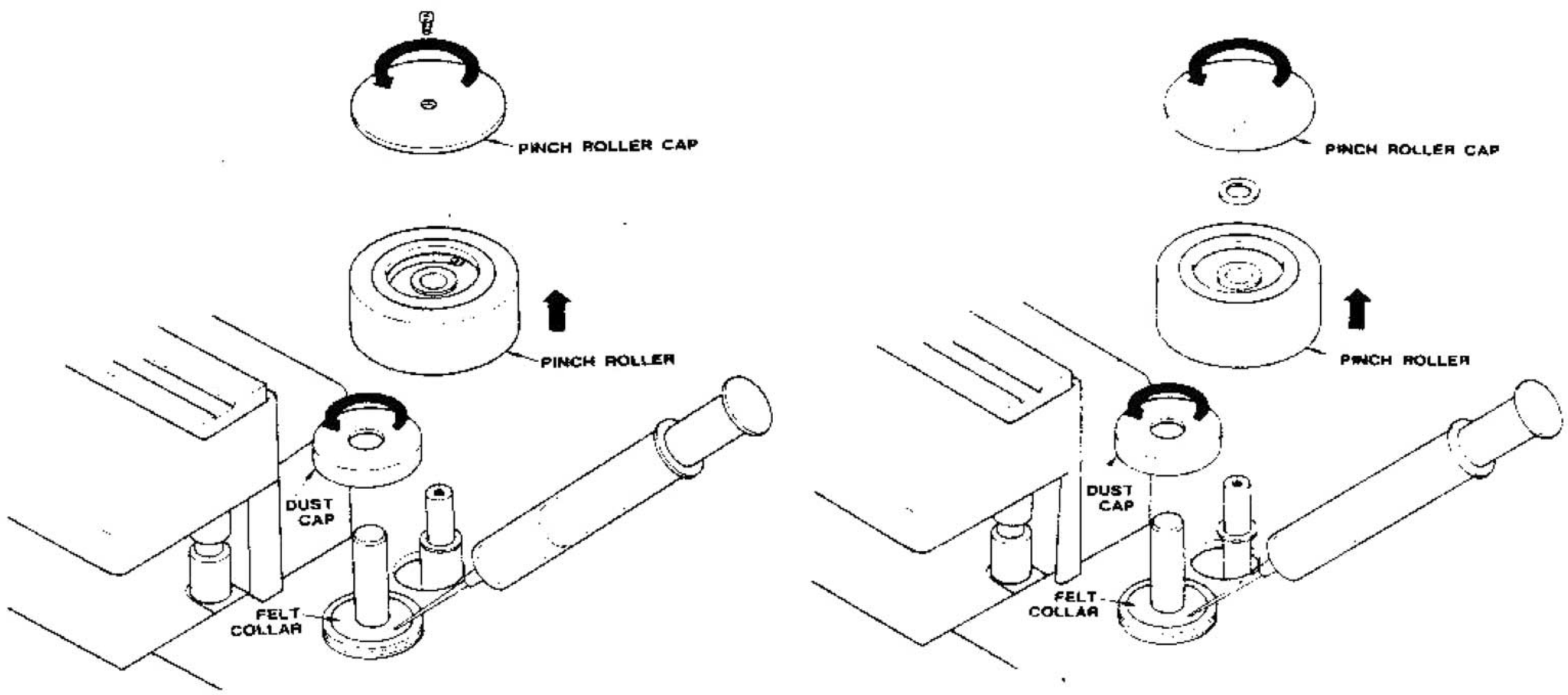

Model ½QXD or 8SD

Model 2SD₂ or QXD

Fig. 1–3 Lubrication

1. Remove pinch roller cap. On Models 2SD₂ or QXD, turn pinch roller cap counterclockwise. On Models ½QXD or 8SD, remove screw on pinch roller cap.
2. Remove pinch roller from the pinch roller shaft.
3. Remove metal dust cap from the capstan shaft by turning counterclockwise.
4. Now the felt collar is visible. Apply 2 or 3 drops of oil onto this felt collar. Please do not over lubricate.
5. On Models 2SD₂, QXD, apply a few drops of oil to the pinch roller bearings.
6. Wipe off any excess oil and reinstall the dust cap, pinch roller cap as they were.

www.hifiengine.com

SECTION 2

TAPE TRANSPORT MAINTENANCE

Tape transport maintenance includes procedures for adjusting supply and takeup reel brakes, adjusting supply reel hold-back tension, and adjusting capstan pinch roller pressure.

2–1 TRANSPORT ACCESS

To gain access to recorder transport proceed as follows:

1. Remove power cord and place recorder in an upright position.
2. Remove top panel and pull down rear cover by removing four screws on each panel.
3. Remove two side panels by removing four screws on each panel.

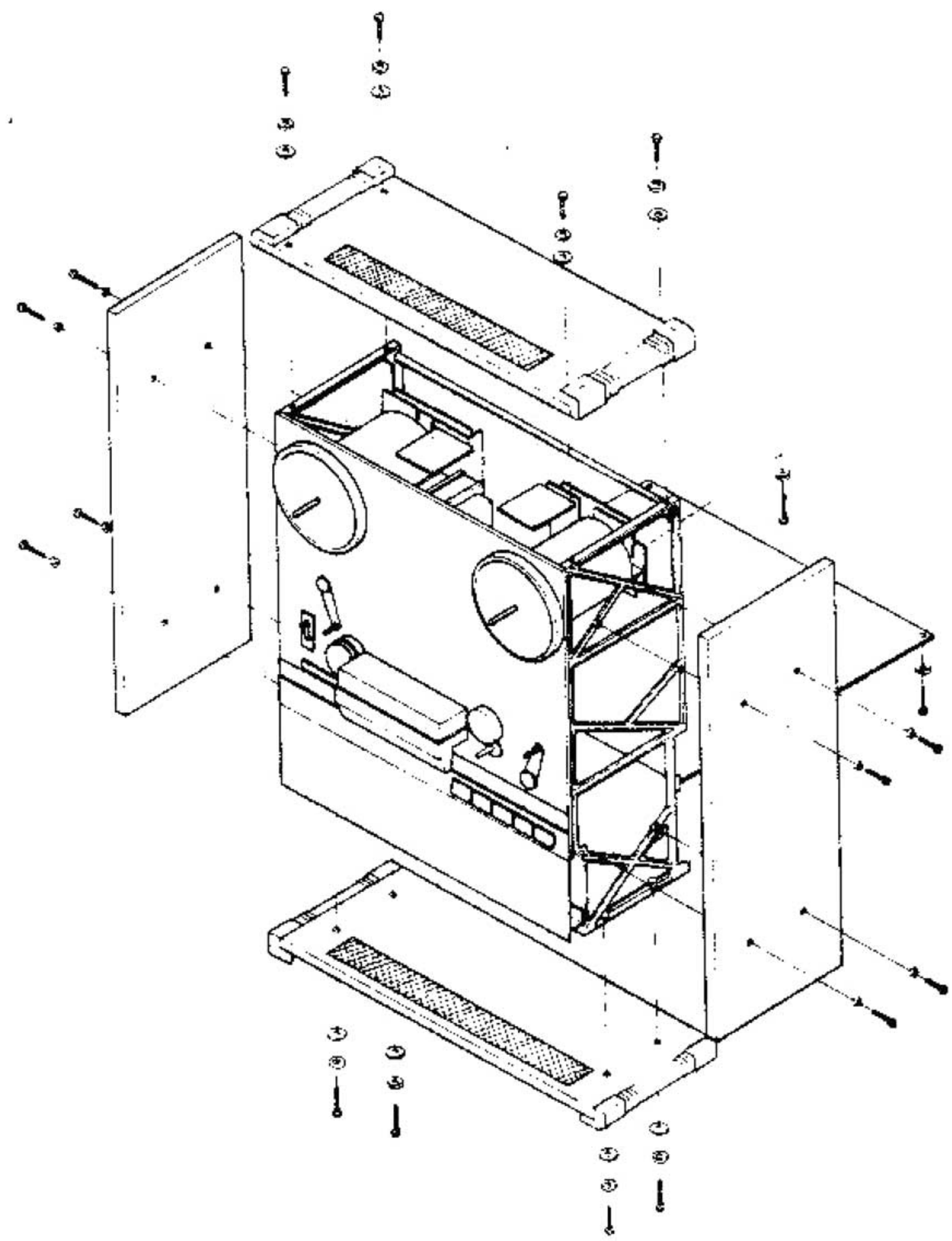

Fig. 2–1 Transport Access

2–2 BRAKE ADJUSTMENT

The brake system on each reel stops reel rotation when entering stop mode or when power is removed. The brakes are checked and adjusted with power removed. Since the brake force is different for each direction of rotation (brake differential), and there is a single adjustment, the force is checked and adjusted for the best compromise force in each direction.

In the following steps, an empty 10½ inch diameter NAB reel (4½ inch diameter hub) is used and a cord or twine is wrapped on the reel. A spring scale is attached to a small loop formed in the free end of the cord or twine.

If an 10½ inch diameter NAB reel (4½ inch diameter hub) is not available, a 7 inch diameter (2¼ inch diameter hub) may be used but all readings must be multiplied by a factor of 2. Proceed as follows: Refer to table 2–1 for the tension specifications on each Model.

1. Place an empty 10½ inch diameter NAB reel on the supply reel turntable. Secure with a holddown knob.
2. Wind a cord or twine a few turns counterclockwise on the hub. Tie a loop in the free end of the cord or twine.
3. Insert the hook of a 0–16 ounce or 0–32 ounce spring scale through the loop and hold the spring scale upright as shown in Fig. 2–2.
4. Pull on the scale slowly to make the reel rotate counterclockwise. While being sure the cord does not rub against either flange, note the scale reading. Reading should be "B" in Table 2–1.
5. Wind the cord or twin in a clockwise direction on the supply reel.
6. Repeat steps 3 and 4 to make the reel rotate clockwise. Reading should be "A" in Table 2–1.
7. If the readings were low in both directions, remove the brake spring (shown in Fig. 2–3) from the existing anchor hole on the brake lever and install spring in the next hole located farther away from the brake solenoid.
8. If the readings were high in both directions move the spring anchor point to a hole closer to the brake solenoid.
9. If the brake spring was moved, repeat steps 2 through 6 to check results.
10. Repeat the brake adjustment procedure on the takeup reel. Note that the high braking force is present when the takeup reel is rotated clockwise. The tension specifications are the same as for the supply reel.

www.hifiengine.com

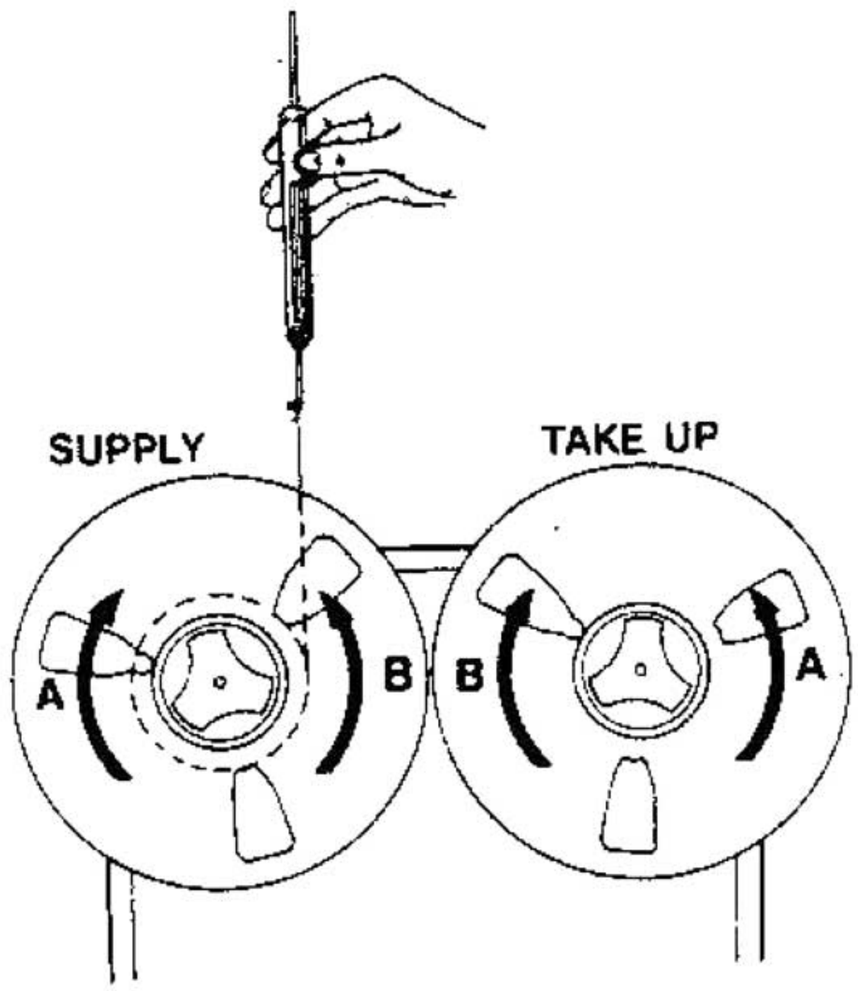

Fig. 2–2 Measurement

Table 2–1 Tension specifications

	$2SD_2$, QXD	½QXD, 8SD
A	3.6~4.5oz (100~125g)	8.7~11oz (250~300g)
B	7.9~9.7oz (225~275g)	20 ~25oz (580~720g)

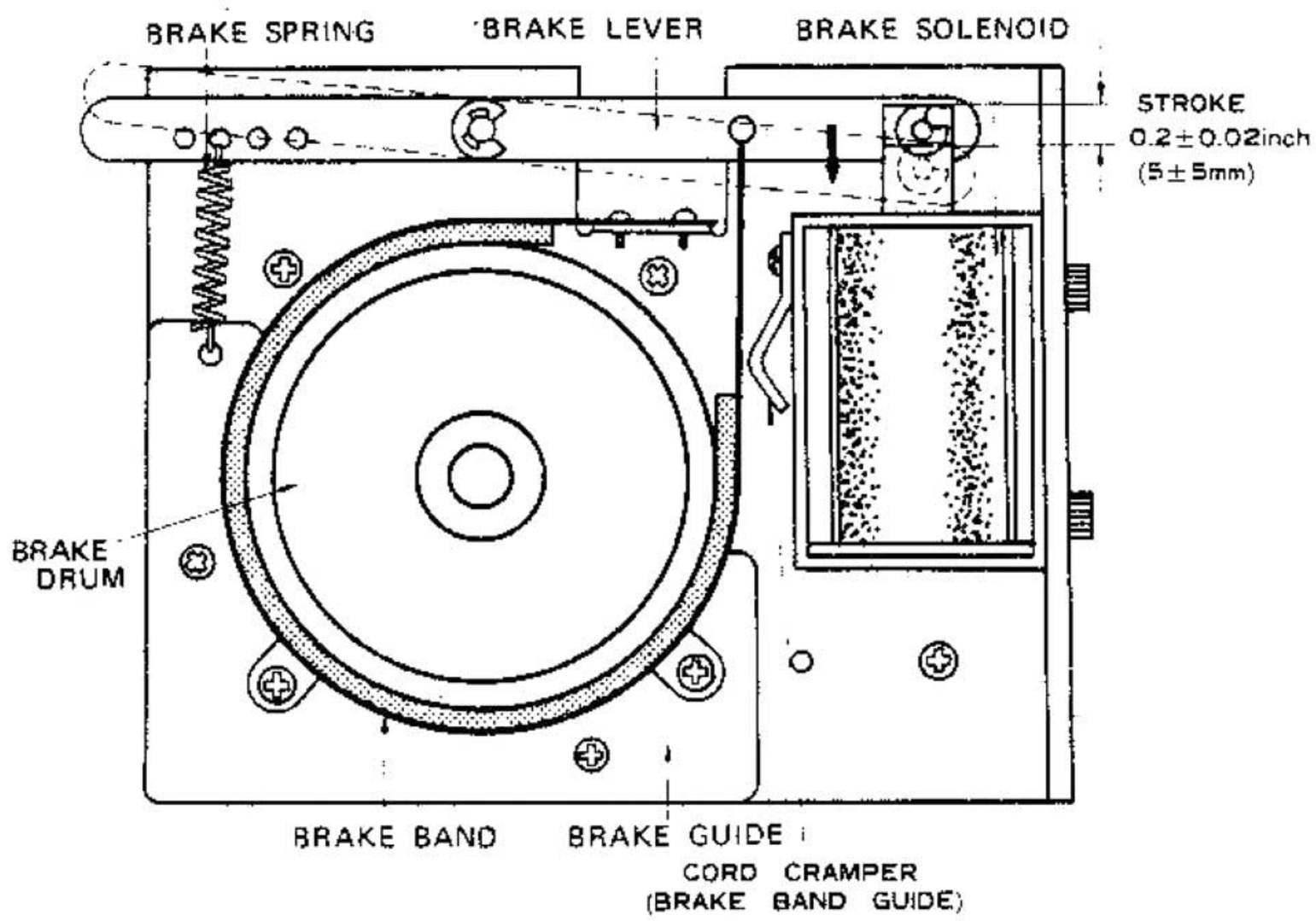

Fig. 2–3 Adjusting Parts Location

2–3 TAPE TENSION ADJUSTMENT

Tape tension is controlled by the amount of torque applied by the reel motors. Only the supply reel motor torque is adjustable. The tape tension is determined indirectly by measuring the supply motor holdback torque in play and fast forward modes. This tension is adjusted by positioning sliders on resistors located below the takeup motor (Fig. 2–4). When adjusting the sliders, loosen the contact screws just enough to slide the contact, then tighten the screw just enough to make good electrical contact.

WARNING

WHEN TRANSPORT POWER IS ON, LINE VOLTAGE IS PRESENT AT THE RESISTORS. TURN POWER OFF BEFORE MAKING AN ADJUSTMENT.

The supply reel tensions were adjusted at the factory with a local power line source. Since motor torque is affected by the source voltage, verify the source voltage is correct before making any adjustment.

In the following steps, an empty 10½ inch diameter NAB reel is used and a cord or twine is wrapped on the reel in the same direction as tape is pulled onto the reel. A spring scale is attached to a small loop formed in the free end of the cord or twine. If an 10½ diameter NAB reel (4½ inch diameter hub) is not available, a 7 inch diameter (2¼ inch diameter hub) may be used but all readings must be multiplied by a factor of 2. The spring scale is held stationary (Fig. 2–2) and with no slack in the cord. The scale indicates cord tension when in fast forward or play modes. Proceed as follows:

1. Use adhesive tape to hold the takeup-tension-arm safety switch in an upright position so that the safety switch is not activated.
2. Place an empty 10½ inch NAB reel on the supply turntable and secure reel with a hold-down knob.
3. Wind the cord or twine a few turns counterclockwise onto the reel hub. Fasten a spring scale to a loop formed on the free end of the cord or twine (Fig. 2–2).
4. Apply power to the recorder.
5. Press F.FWD pushbutton switch. The reading should be "C" in Table 2–2. If necessary adjust slider "C". (Moving slider towards front of transport increases tension.)
6. Set REEL switch to Large "out" position.
7. Hold the scale upright and press PLAY pushbutton switch. After an initial surge, the reading should be "A" in Table 2–2. If necessary adjust slider "A". (Moving slider towards front of transport increase tension.)
8. Set REEL switch to Small "in" position.
9. Press PLAY pushbutton. After an initial surge, the reading should be "B" in Table 2–2. If necessary adjust slider "B". (Moving slider towards front of transport increases tension.)

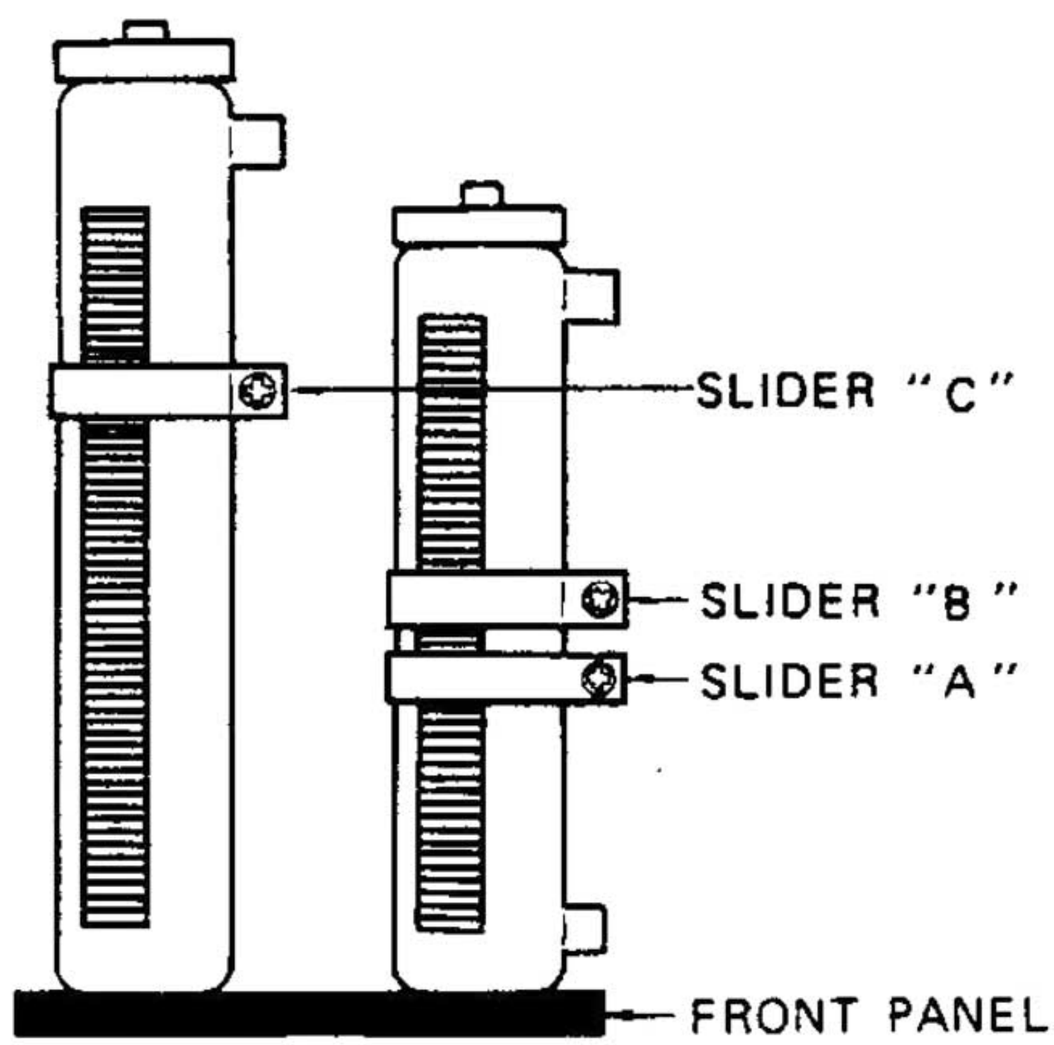

Fig. 2–4 Tape Tension Adjustment Resistors

Table 2–2 Tape Tension Specifications

SLIDER	MODE	$2SD_2$, QXD	½QXD, 8SD
A	PLAY LARGE	2.2~2.7 oz (63~77 gram)	5.1~6.2 oz (140~180 gram)
B	PLAY SMALL	1.4~1.8 oz (40~50 gram)	2.8~3.5 oz (80~100 gram)
C	F.FWD.	1.4~1.8 oz (40~50 gram)	1.4~1.8 oz (40~50 gram)

2–4 CAPSTAN PINCH ROLLER PRESSURE ADJUSTMENT

The capstan pinch roller pressure against the capstan is determined by the capstan solenoid spring. This force is adjusted by means of nut shown in Fig. 2–6. This force is adjusted by means of nut shown in Fig. 2–6. The nut is adjusted to obtain a force of 6.4~7.0 pounds. The resistance of the solenoid coil rises with temperature and causes the solenoid force to decrease. Therefore, do not adjust the pinch roller pressure until the recorder has been operated in play mode for at least 30 minutes prior to performing the following procedure.

1. Use adhesive tape to hold the takeup-tension-arm safety switch in an upright position so that the safety switch is not activated.
2. Tie a cord or twine together for form a continuous loop. Place one end of the loop around the capstan pinch roller shaft.
3. Press the PLAY pushbutton. The pinch roller will move to contact the capstan and both will rotate.
4. Hook a 0 to 10 pound spring scale to the other end of the cord and pull the cord taut straight to center of capstan as shown in Fig. 2–5. Do not let the cord contact the rotating pinch roller.
5. Pull on the scale and note the scale reading when the pinch roller just loses contact with the capstan (the pinch roller stops rotating). The scale reading should be 6.4~7.0 pounds.
6. If the proper scale reading was not obtained in step 5, loosen the locknut and adjust the pressure nut as required. (Turning the pressure nut towards the spring increases pinch roller pressure.) Tighten locknut.
7. After adjustment is completed, check that the solenoid bottoms within the solenoid coil (pinch roller can easily be pushed away from the capstan). If the solenoid does not bottom, loosen locknut and turn pressure nut away from spring until solenoid bottoms. Recheck pressure adjustment and tighten locknut.

After the proceeding adjustments are completed, reinstall top panel, two side panels, and rear cover (16 screws total). For transport component replacement procedures, refer to Section 4 of this manual.

www.hifiengine.com

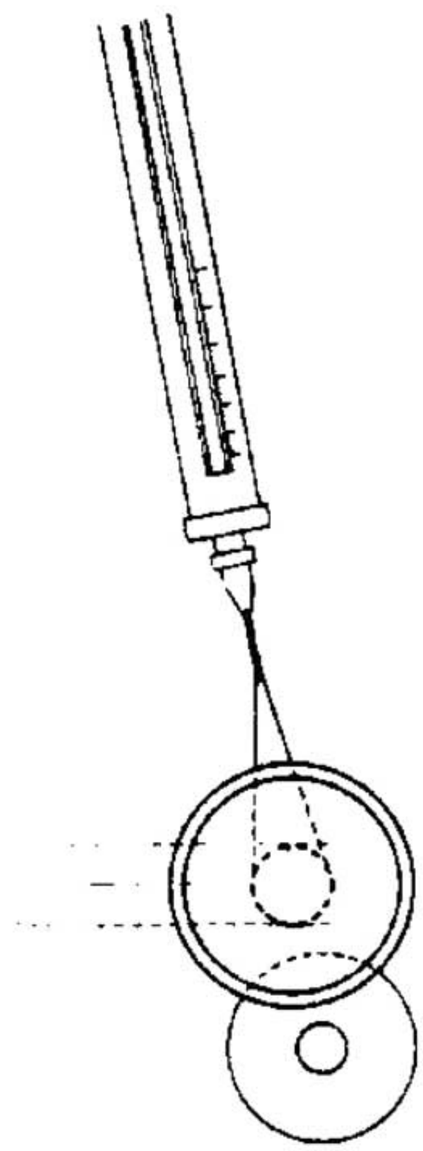

Fig. 2–5 Measurement

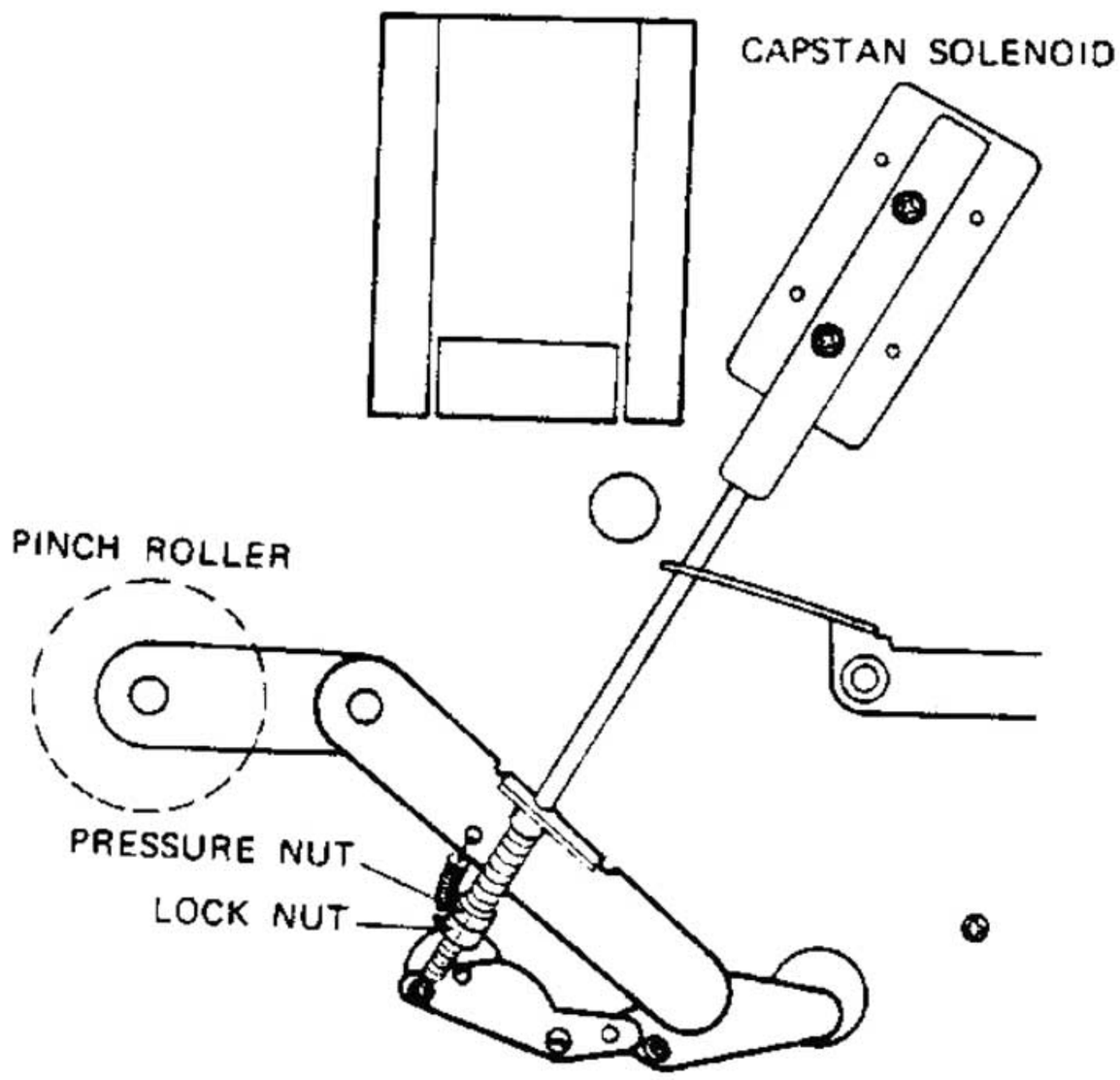

Fig. 2–6 Adjusting Parts Location

2–5 CAPSTAN SPEED ADJUSTMENT

Capstan speed can be adjusted by speed control on servo control printed circuit board.
This adjustment follows tape speed measurement in Section 3 and adjust the speed control as shown in Fig. 2–7 as necessary.

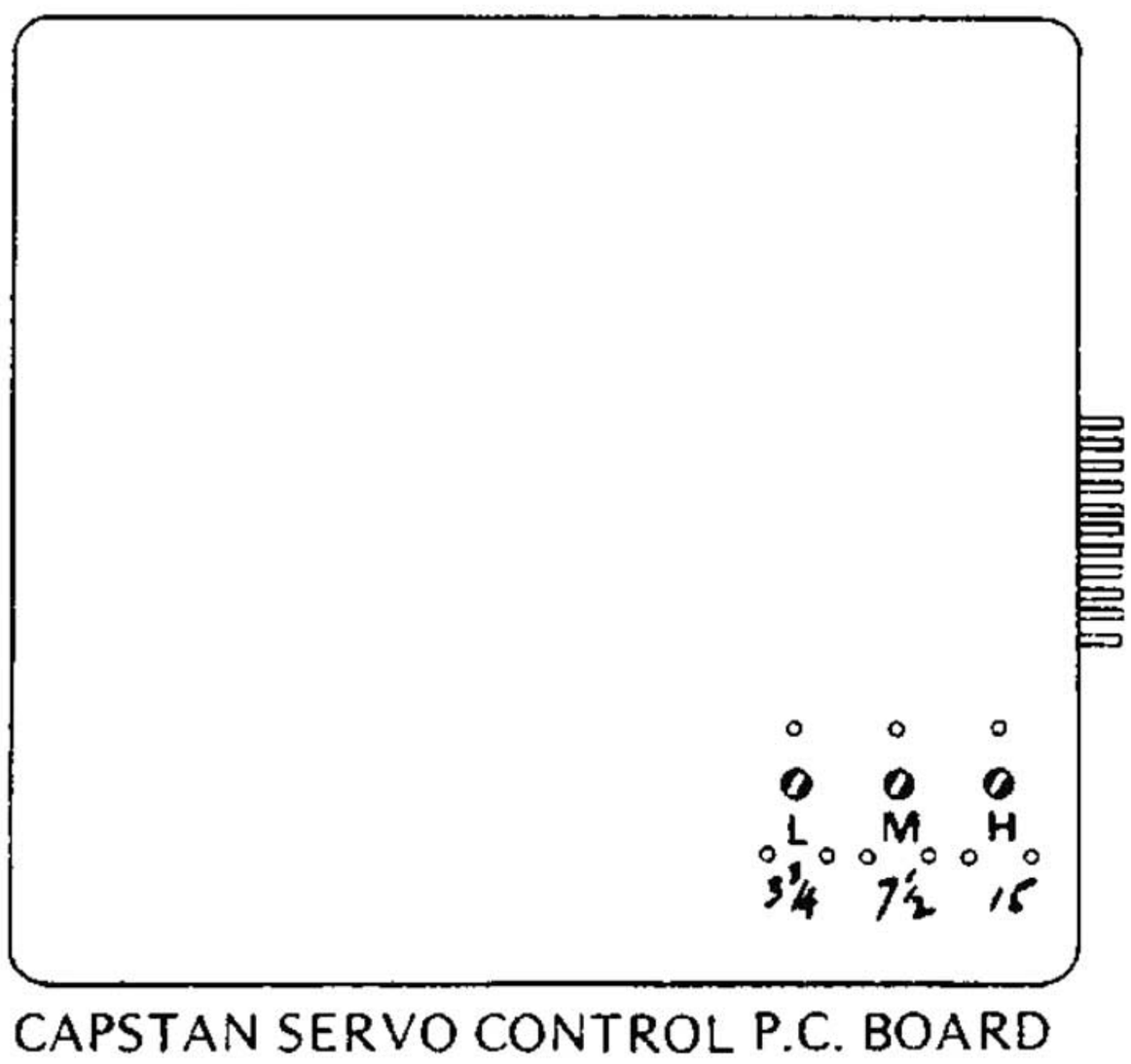

Fig. 2–7 Adjusting Parts Location

SECTION 3
PERFORMANCE TESTS
AND ELECTRONIC ALIGNMENT

Performance tests should be performed at regularly scheduled intervals (every 150 hours or 1 month periods) to ensure the recorder is performing within specifications. These tests should also be performed whenever the recorder appears to be malfunctioning and following repairs to the equipment that may affect performance. If the performance test is not successful, proceed to the applicable electronic alignment procedure. It is important that clean and demagnetize the head and tape guiding components before performing the following steps.

3–1 TEST EQUIPMENT

The test equipment listed in Table 1–1 is required for completion of the performance and alignment procedures.

3–2 TEST TAPES

The test tapes are precisely recorded under controlled conditions and must be correctly handled and stored to retain their accuracy. The following requirements should be followed:

1. Clean and demagnetize the heads and tape guiding components before installing the test tape.
2. Never store test tapes in areas where there are temperature or humidity extremes.
3. Remove test tapes from equipment only after a normal play run (never after a fast-winding mode). This is further explained below.

During the alignment procedure, the rewind and fast forward modes should not be used. After alignment, wind the tape completely on the takeup reel, interchange reels, thread the tape, and place the equipment in the play mode to wind the tape back on its original reel.
All tones on an Ampex 15 in/s standard alignment tape are recorded at operating level. On slower speed tapes, all tones are recorded 10 dB below operating level except for the last tone. After extensive use, high frequency tones may drop as much as 2 dB. In addition, flutter indications may rise even though actual flutter remains unchanged. Flutter increase is caused by : demagnetization of the recorded signal from repeated plays; tape deformation due to tape tension, changes in temperature and humidity; and increased dropouts resulting from tape wear.

www.hifiengine.com

3–3 TEST CONDITIONS

The test conditions specified in the following steps are to be used prior to performing the tests. After these test conditions are set up, continue with the procedures that follow for checking overall signal-to-noise, overall distortion, crosstalk, and flutter.

1. Clean and demagnetize the heads.
2. Use high quality low-noise tape such as Ampex 406, 407, 456 or Scotch 206, 207, 250, or equivalent, bulk erase the blank tape.
3. Turn power on and allow unit to warm up for 20 minutes.
4. Be sure head cover is installed for all tests.

3–4 PERFORMANCE TESTS

Before making performance test, SRL check, reproduce frequency response check, record level check, monitor level check, overall frequency response check, and SEL/REP level check are necessary. Refer to 3–5 ELECTRONIC ALIGNMENT in this section for checking procedures.
For performance tests, preliminary proceed as follows.
Demagnetize and clean heads and guiding compornents.

1. Set REEL switch to appropriate position, and set EDIT switch to "out" non edit position.
2. Set LINE OUT switch to H, set each RECORD switch to "in" record position, set each SEL/REP switch to "out" position, and set each MONITOR switch to "out" SOURCE position.
3. Thread a reel of bulk-erased tape onto the transport, set SRL switch to SRL position, and push PITCH CONTROL knob to place fix position.

www.hifiengine.com

3–4–(1) OVERALL SIGNAL-TO-NOISE

The overall signal-to-noise test requires an ASA "A" weighted filter to attenuate noise outside of the audible frequency band. The filter is shown in Fig. 3–1 and may be built into a small alumimum box as shown in Fig. 3–1.

Signal-to-noise depends on SRL calibration, reproduce equalization, bias calibration, and record equalization. Proceed as follows:

1. Connect filter to CH–1 LINE OUT and connect VTVM to the output of filter.
2. Hold TEST OSC pushbutton depressed and adjust CH–1 INPUT LINE control for 0 VU indication on the VU meter.
   (On model MX–5050 $2SD_2$, set reproduce head selector switch at the rear of the head assembly to 2T position.)
   Note VTVM indication, VTVM does not read +4 dBm due to insertion loss of filter.
3. Depress CH–1 MONITOR switch to "in" TAPE position, set CH–1 INPUT LINE and CH–1 INPUT MIC controls to full counterclockwise position. Reset TAPE TIMER to "0000".
4. Start record mode and record for one minute. Rewind the tape to "0000" indication on the timer.
5. Reproduce the recorded portion and read noise level on VTVM.
6. Signal-to-noise retio is determined by calculating the difference in readings obtained in step 2 and step 5 plus 9 dB (peak recording level–520 nWb/m–is 9 dB above SRL–185 nWb/m)
7. Repeat step 1 through 6 for the other channels as required, change tape speed to other and check signal-to-noise retio.

Table 3–1. Signal-to-noise specifications (ASA weighted)

Models	$2SD_2$	QXD	½QXD	8SD
15 or 7½	68	65	68	65
3¾	67	64	67	64

www.hifiengine.com

If signal-to-noise specifications are not obtained, check and adjust following items.

1. SRL caliblation is incorrect.
2. BIAS/CAL adjustment is incorrect.
3. Reproduce equalization is incorrect.
4. Record equalization is incorrect.
5. Bias buffer adjustment is incorrect.
6. Record and/or reproduce electronics is defective.
7. Head is magnetized.
8. Affected with magnetic flux of a motor, a soldering iron or a transformer near the recorder.

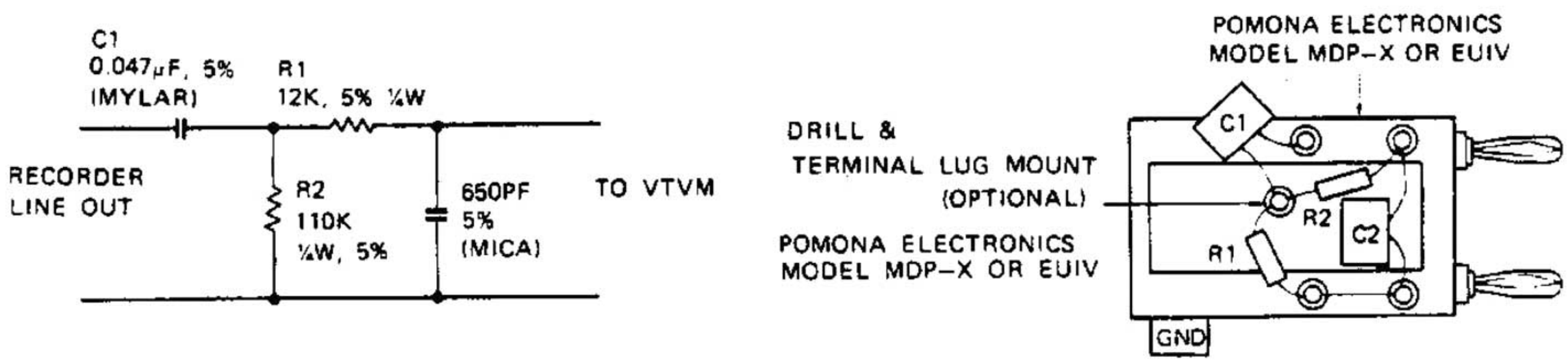

Fig. 3–1 ASA "A" Weighted Filter

3–4–(2) OVERALL DISTORTION TEST

For accurately checking distortion it is necessary to use an audio oscillator with less than 0.1% distortion and a wave analyzer with an adjustable bandwidth capability. A wave analyzer with too narrow a bandwidth may make it difficult to measure harmonics due to flutter components within the transport. Instruments that measure total harmonic distortion will be affected by tape and modulation noise in addition to harmonic distortion. To measure overall harmonic distortion proceed as follows:

1. Connect wave analyzer to CH–1 LINE OUTPUT and connect audio oscillator to CH–1 LINE INPUT.
2. Set MONITOR switches to "in" TAPE position, set audio oscillator frequency to 1000 Hz.
3. Set wave analyzer frequency to 1000 Hz, bandwidth to 100 Hz, and mode selector switch to AFC.
4. Start Record mode and adjust CH–1 INPUT LINE control for O VU on the VU meter.
5. Adjust fine tuning control on the wave analyzer and adjust analyzer input level control for full scale reading of 100%.
6. Change wave analyzer tuning control to 2000 Hz and measure second harmonic content. The second harmonic content should not exceed 0.5%.
7. Change wave analyzer tuning control to 3000 Hz and measure third harmonic content. The third harmonic distortion is dependent upon the type of tape used, accuracy of the BIAS/CAL setting. Typical reading for low noise high output tape is 0.5%. Typical reading for standard output professional grade tape is 0.8%.

If distortion specification is not obtained, check and adjust the following items.

1. SRL caliblation is incorrect.
2. BIAS/CAL adjustment is incorrect.
3. Head is magnetized.
4. Bias buffer adjustment is incorrect.
5. Record and/or reproduce electronics is defective.

www.hifiengine.com

3–4–(3) CROSSTALK TEST

It is important that blank bulk-erased tape is used for crosstalk test. To measure crosstalk between channels proceed as follows:

1. Follow the procedure for Overall Distortion Test, steps 1 through 5.
2. Connect wave analyzer from the output of CH–1 to CH–2 LINE OUTPUT.
3. Measure the crosstalk in dB.
   Crosstalk should not exceed Table 3–2. If crosstalk specification is not obtained, record and reproduce head alignment (height and tape contact) is incorrect or record or reproduce head is detective.

Table 3–2. Crosstalk specifications (Between adjacent channels)

$2SD_2$	½QXD	QXD	8SD
60 dB	55 dB	50 dB	50 dB

3–4–(4) ERASURE TEST

It is important that blank bulk-erased tape is used in erasure test. To measure erasing effect proceed as follows.

1. Follow the procedure for Overall Distortion Test step 1 through 5. A 1000 Hz signal is being recorded at SRL.
2. Set SRL switch to off position and adjust OUTPUT control for –10 VU on VU meter.
3. Adjust INPUT LINE control for O VU on VU meter and 1000 Hz signal is being recorded at 10 dB above SRL. Continue recording for a few minutes.
4. Remove the audio oscillator.
5. Rewind and reproduce the recorded position.
   VU meter reading should be O VU.
   Check wave analyzer and readjust as necessary.
6. Press RECORD pushbutton to place recorder in record mode.
   As the tape is being erased, adjust the percent scale on the wave analyzer to read the residual 1000 Hz tone.
7. Repeat the same procedure for other channels.
8. Erasure effect should be more than 65 dB.

www.hifiengine.com

If erasure specification is not obtained, check and adjust following items.

1. Erase and/or record head alignment is incorrect. (height, tape contact)
2. Erase head is worn.
3. Erase head surface is dirty.
4. Bias buffer adjustment is incorrect.

3–4–(5) TAPE SPEED MEASUREMENT

A flutter test tape is used for measuring tape speed.
Since tape tension affects the tape speed, it is important for accurate measurement that flutter test tape is used to be attached to end of full winded blank tape as Fig. 3–2 and is used with REEL pushbutton to appropriate reel size to be used.
Proceed as follows:

1. Place PITCH CONTROL to fix position and set all RECORD switch to off "out" position.
2. Connect frequency counter to LINE OUT and set MONITOR switch to TAPE position.
3. Set SPEED switch to HI and use test tape to appropriate tape speed.
4. Attach test tape to 10½ inch NAB reel as Fig. 3–2, place test tape onto supply reel table, thread the tape, and set REEL switch to L position.
5. Place recorder in play mode and note reading on frequency counter.
   Reading should be 2994 ~ 3006 Hz (3000Hz ± 0.2%).
6. Repeat procedure for at a point towards the end of the reel, for at 7 inch EIA reel and for at low tape speed.

If speed accuracy is not within ± 0.2%, check and adjust following items.

1. Capstan servo control is incorrect.
2. Capstan motor is defective.
3. Pinch roller tire is worn, or has insufficient pressure.
4. Brakshoe is contacting brake drum.
5. Tape tensions are incorrect.
6. Power requirement is incorrect.
7. Pinch roller and capstan are dirty.

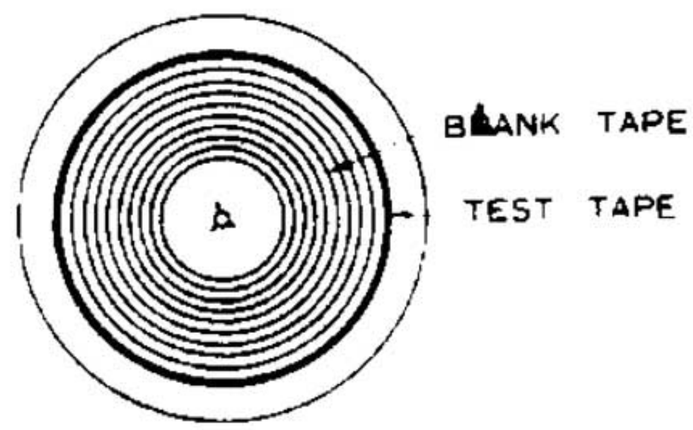

Fig. 3–2 Using Test Tape

3–4–(6) FLUTTER AND WOW TEST

It is recommended that these checks be made with standard flutter test tapes (See Table 1–2) which are recorded on pricise equipment to produce less than 0.03% rms flutter. If flutter tapes are not available it is possible to record a 3000 Hz or 3150 Hz signal to be used for a flutter measurement. After recording a section of tape, rewind to the begining and start the tape in the reproduce mode. Since it is possible for the record mode flutter to either add or subtract from the reproduce mode flutter depending upon the phase relationship, it is necessary to make several passes over the recorded section of tape and average the flutter meter readings.
Flutter meters are sensitive to amplitude modulation that results from poor head-to-tape contact or from signal dropouts. Therefore, clean the heads before making flutter tests.

Test tape method is as follows:
It is important that flutter test tape is used to be attached to end of full winded blank tape as Fig. 3–2, and is used with REEL pushbutton to appropriate reel size to be used.

1. Place PITCH CONTROL to fix position and set all RECORD switch to off "out" position.
2. Connect flutter meter to LINE OUT of a inner track channel and set that channel MONITOR switch to TAPE position.
3. Set selector switch of flutter meter to NAB weighted position, set SPEED switch to HI and use test tape to appropriate tape speeds.
4. Attach test tape to 10½ inch NAB reel as Fig. 3–2, place test tape onto supply reel table, thread the tape, and set REEL switch to L position.
5. Place recorder in play mode and note reading on flutter meter. Reading should be Table 3–3.
6. Repeat procedure for at a point towards the end of the reel, for at 7 inch EIA reel and for at low tape speed.

Record-playback method is as follows:

1. Connect oscillator signal output of the flutter meter to a inner channel (not edge channel) LINE INPUT of the recorder.
2. Connect the same channel LINE OUTPUT of the recorder to the signal input of the flutter meter
3. Set SPEED switch to HI, set same channel SRL switch to SRL position set MONITOR switch to TAPE, position, start record mode, and adjust appropriate INPUT LINE control

4. Rewind and reproduce recorded portion, note the flutter and wow on the flutter meter.
5. Check flutter and wow at low tape speed and check at a point towards the end of the reel.

Table 3–3 Flutter and wow specifications

Tape speed	Flutter and wow
15 ips	0.05 %
7.5 ips	0.06 %
3¾ ips	0.15 %

Flutter and wow can be caused by any element in the tape path. Excessive flutter and wow may be traced by observing the flutter component on an oscilloscope screen connected to the demodulator output of the flutter meter. If the fluctuation rate observed on the oscilloscope coincides with the rotation elements, such as the supply or takeup reel, capstan or pinch roller, the problem source may be easily traced. Other sources of excessive flutter and wow are:

1. Capstan servo control is defective.
2. Capstan motor damaged.
3. Capstan needs lubrication (dry bearing).
4. Tape tensions are incorrect.
5. Brakeshoe is contacting brake drum.
6. Tape reels or tape is defective.
7. Pinch roller tire is worn, has insufficient pressure, or pinch roller solenoid is not bottomed.
8. Pinch roller and capstan are dirty.

3–5 ELECTRONIC ALIGNMENT

If the previous performance tests were not successful, perform the following applicable reproduce, record, or bias amplifier alignment procedure.

www.hifiengine.com

3–5–(1) REPRODUCE ALIGNMENT

Reproduce adjustment consists of reproduce head azimuth adjustment, reproduce equalization adjustment, and standard reproduce level (SRL) calibration.

Location of each calibration potentiometer control is shown in Fig. 3–3. To adjust the reproduce system, proceed as follows:

1. Lift head cover and demagnetize and clean heads and guides.
2. Set LINE OUT switch to HIGH, set SRL switch to "off" variable position. Set REEL switch to appropriate position, and set EDIT switch to "out" (non edit) position. On model MX–5050 $2SD_2$, set reproduce head selector switch to 2T position.
3. Set each RECORD switch to "out" (non record) position, set SEL/REP switches to "out" position, and set MONITOR switches to "out" SOURCE position.
4. Connect VTVM to LINE OUT.

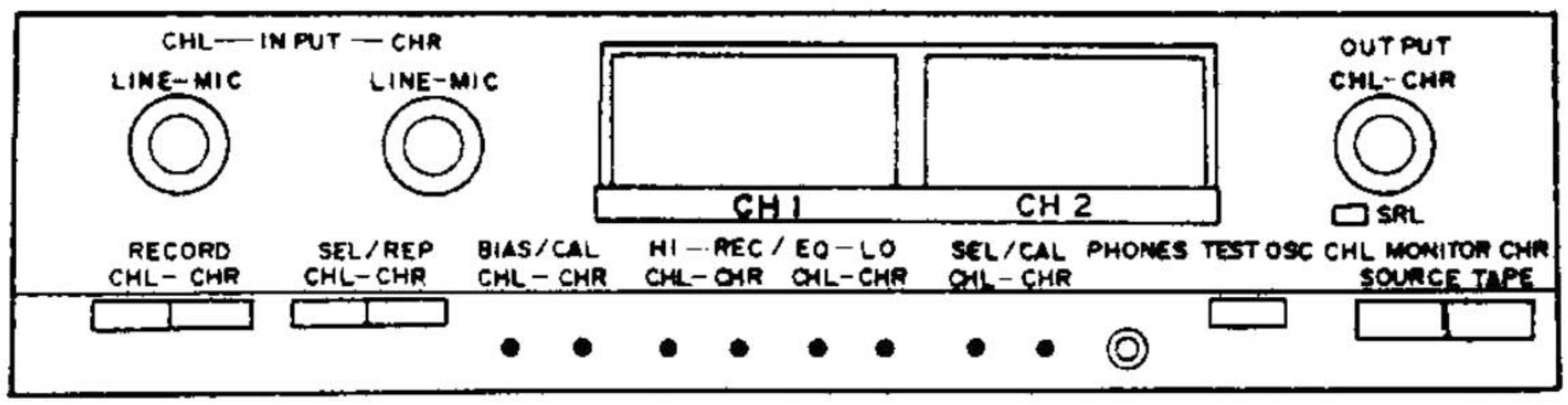

Amplifier Front Panel

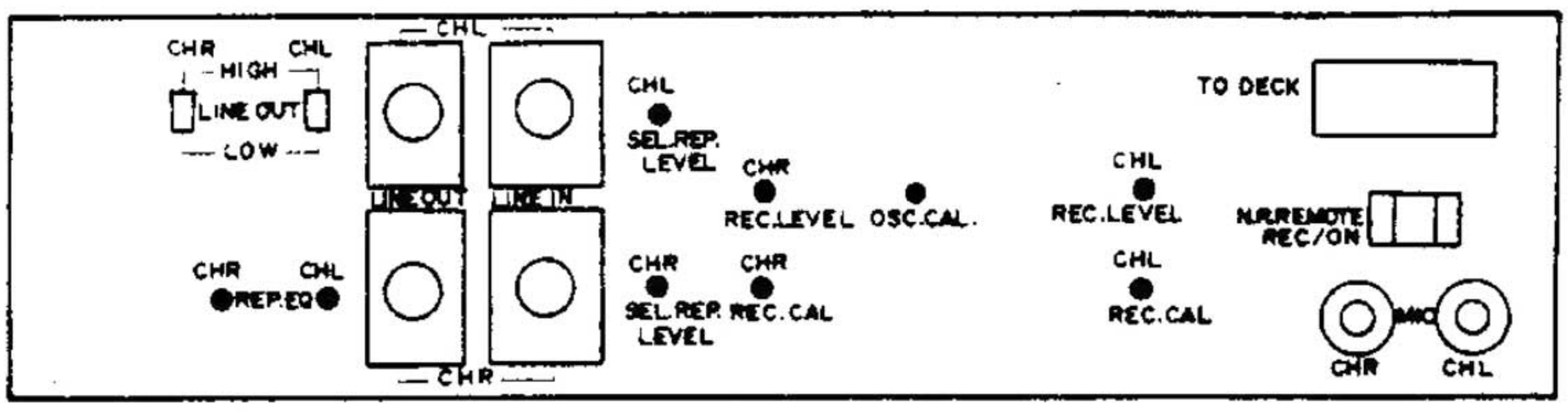

Amplifier Rear Panel

Fig. 3–3 Adjusting Parts Location

3–5–(2) REPRODUCE HEAD AZIMUTH ADJUSTMENT

It is recommended that reproduce head azimuth adjustment is made at 7½ ips tape speed. On Models ½QXD and 8SD, azimuth adjustment is not required exept for head replacement.

5. Set SPEED switch to appropriate position for 7½ ips.
6. Thread 7½ alignment test tape on the equipment.
7. Place equipment in play mode, first tone on test tape is refference level of 700 Hz. Adjust OUTPUT level control to obtain O dBm on the VTVM. Next tone is for azimuth adjustment (15 kHz).
8. Adjust the head azimuth screw (appropriate screw "A" in Fig. 4–5) to obtain a maximum reading on the VTVM.

CAUTION

DO NOT SCREW ANY OTHER SCREWS EXCEPT AZIMUTH ADJUSTMENT SCREW.

9. If a maximum reading cannot be achieved within one full turn of the azimuth screw, or a maximum reading on the VTVM is way below O dBm, a full head alignment may be required. Refer to section 4 of this manual.

3–5–(3) REPRODUCE EQUALIZATION ADJUSTMENT

This adjustment is performed at 7½ ips tape speed for both High speed models and Low speed models.

11. Reproduce the 10 kHz tone and adjust REP EQ potentiometer to appropriate speed so that VTVM indicate O dBm. If adjustment was required, recheck the 15 kHz tone and note if reading is O dBm ±2 dB.
12. Check response for the other tones on the alignment tape. Frequency response should be O dBm ± 2 dB.

www.hifiengine.com

13. Check frequency response for the other speed.
    Frequency response should be O dBm ±2 dB.
    It is unnecessary to readjust equalization for 15 ips or 3¾ ips, since adjustment has been done at the same time of 7½ ips.

NOTE

Many test tapes are recorded full track. When reproduced by a half-track or multi–track head, the fringing effect produces invalid response at frequencies below 700 Hz. This effect, which results in high indications in the lower frequencies, does not occur when tapes are recorded and reproduced with heads of the same configuration. Do not adjust the low frequency reproduce equalizers for flat response from a full track standard tape.

3–5–(4) SRL ADJUSTMENT

This adjustment is made with the operating level 700 Hz signal of the standard alignment tape. It is important that this adjustment is accurate since it affects signal to noise ratio, distortion, and tape saturation level. On Ampex standard alignment tapes this level is 185 nWb/m and is the first tone for 15 ips the last tone for 7½ ips and 3¾ ips tapes. It is suggested that SRL be set at the speed at which the equipment will usually run. If used equally, set at 15 ips for high speed models, 7½ ips for low speed models.

14. Set SRL switch to SRL position. Reproduce the operating level tone and adjust SRL/CAL potentiometer so that each VU meter indicates O VU or a +4 dBm or – 10 dBm reading on the VTVM depending upon the LINE OUTPUT LEVEL selector.

NOTE

If high output extended dynamic range tapes are to be used such as Scotch 206, 207 or 250 or Ampex 406, 407 or 456 (or equivalent), the SRL/CAL and SEL/REP levels may be set lower than O VU. Consult Otari representative. Nominal setting for these tapes is –3 VU.

www.hifiengine.com

3–6 RECORD AND BIAS SYSTEM ADJUSTMENT

Record and bias system adjustment consists of bias calibration, bias buffer adjustment, record level adjustment, record level calibration, record head azimuth adjustment, record equalization adjustment, and SEL/REP LEVEL adjustment.
The record and bias system adjustment should be made after reproduce system adjustments are completed.

1. Connect VTVM to LINE OUT, connect audio oscillator to LINE IN, and thread blank bulk-erased tape onto the transport.
2. Push POWER switch to on, set SPEED switch to HI position, and set MONITOR switch to TAPE position, set LINE OUT LEVEL switch to HIGH position, and SRL switch to SRL position.

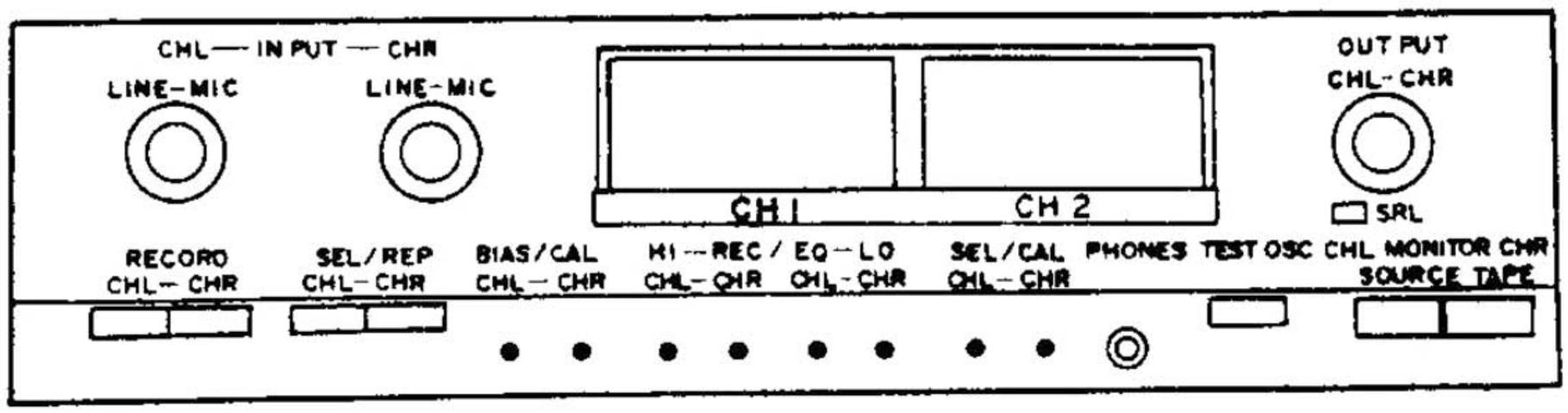

Amplifier Front Panel

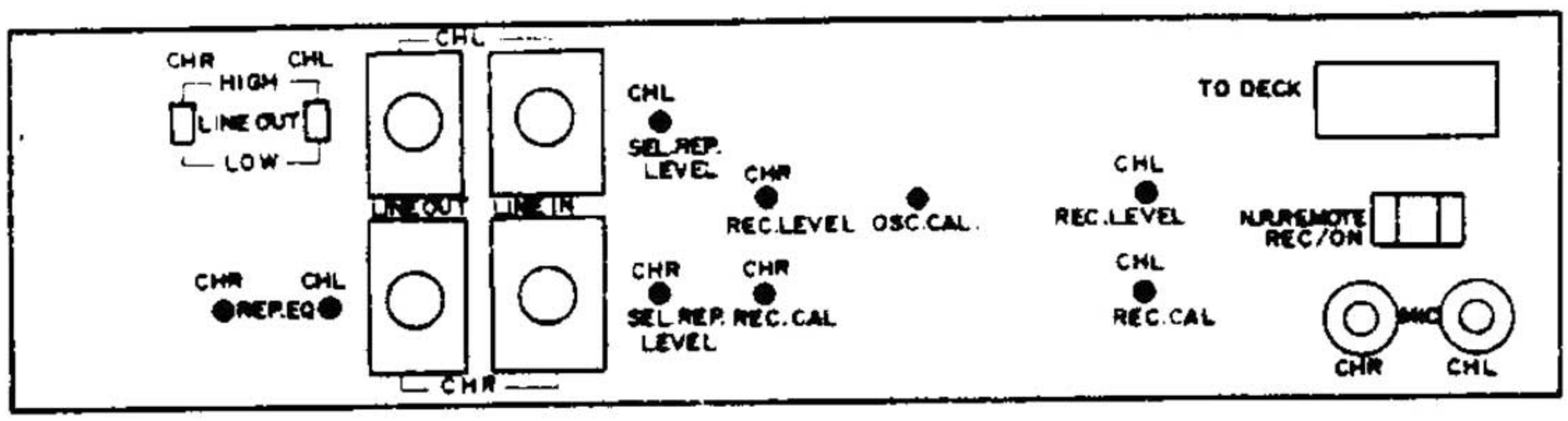

Amplifier Rear Panel

Fig. 3–4 Adjusting Parts Location

3–6–(1) BIAS BUFFER AMPLIFIER ADJUSTMENT

This adjustment is necessary when making other adjustment on record and bias adjustment. Refer to EXPLODED VIEW 12 and 13 in Section 6

3. On Model $2SD_2$ or QXD, remove top and left side panel by removing each four screws and connect VTVM to both leads of resistor on head assembly printed circuit board.

   On Model 8SD, remove front panel by removing three pair knobs and four screws, and connect VTVM between center leg of BIAS/CAL control and ground.

4. Place recorder in record mode and adjust output transformer L1 and L101 (shown in Fig. 3–5 using plastic Allen wrench for maximum reading on VTVM.

3–6–(2) BIAS CALIBRATION

Bias adjustment should be made at 15 ips for high speed models and 7½ ips for low speed models. Record bias current affect signal-to-noise ratio, frequency response, distortion, and recording level. Then it is important to adjust bias current for the using tape in order to make perfect recording.

5. Connect 1 kHz tone of audio oscillator to LINE INPUT. (Built in TEST oscillator is also available.) Set MONITOR switch to TAPE position.
6. Start Record mode and adjust INPUT LINE control for O VU on the VU meter.
7. Adjust the BIAS/CAL potentiometer for maximum reading on the VU meter.

3–6–(3) RECORD HEAD AZIMUTH ADJUSTMENT

This adjustment should be made at 7½ ips tape speed and at least 10 dB below SRL.
On models ½QXD and 8SD, head azimuth adjustment is not required exept for head replacement.

8. Set audio oscillator frequency to 15 kHz.
9. Start record mode and adjust INPUT LINE control for –10 dBm on VTVM (14 dB below SRL).
10. Adjust record head azimuth adjustment screw (labeled "A" in Fig. 4–5)for maximum reading on VTVM.
11. If a peak reading cannot be achieved within one full turn of the azimuth screw, a full head alizument may be required. Refer to Section 4 of this manual.

www.hifiengine.com

3–6–(4) RECORD LEVEL ADJUSTMENT

This adjustment should be made at 15 ips for high speed models and 7½ ips for low speed models.

12. Set audio oscillator frequency to 1 kHz and output level –15 dBm.
13. Set INPUT LINE control to full clockwise position. Set SRL switch to SRL. Set MONITOR switch to TAPE.
14. Start record mode. Adjust REC LEVEL potentiometer for O VU on VU meter.

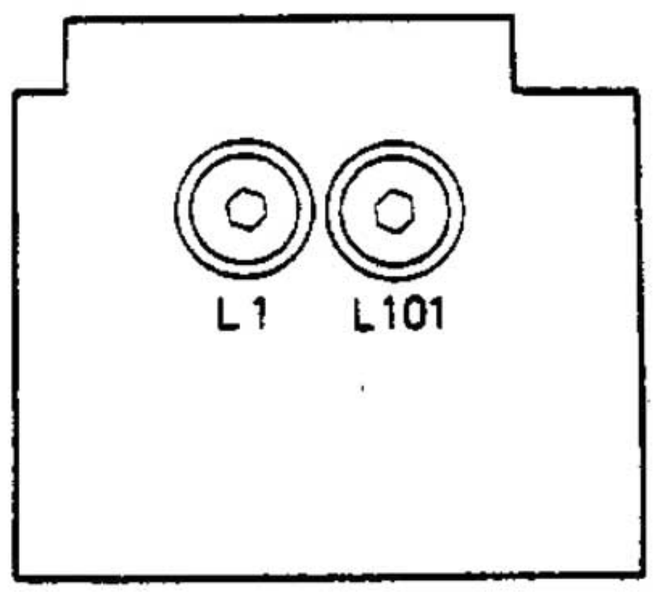

Fig. 3–5 Bias Buffer Adjusting Parts

3–6–(5) RECORD LEVEL CALIBRATION

This calibration should be made after record level adjustment continuously.

15. Set MONITOR switch to SOURCE position.
16. Calibrate REC. CAL. potentiometer so that VU meter indicates O VU.

3–6–(6) TEST OSCILLATOR LEVEL CALIBRATION

This calibration should be made after record level calibration continuously.

17. Adjust audio oscillator output level –5 dBm (1 kHz).
18. Adjust INPUT LINE control for O VU SOURCE output.
19. Push TEST OSC button and calibrate OSC. CAL. potentiometer for O VU SOURCE output.

www.hifiengine.com

3–6–(7) SEL/REP LEVEL ADJUSTMENT

It is possible to adjust SEL. REP. LEVEL using standard alignment tapes, however, it is recommendable to be made as following procedure.

20. Set MONITOR switch to TAPE position.
21. Record 1 kHz signal at SRL for about one minute.
22. Rewind and reproduce the recorded position in the step, and check VU meter should indicate O VU.
23. Depress SEL/REP switch and adjust SEL. REP LEVEL potentiometer so that VU meter indicate O VU.

NOTE

If this adjustment is made by using standard alignment test tapes which are full track recorded, there will be a little error on acount of fringing effect.

www.hifiengine.com

SECTION 4

MAJOR COMPONENT REPLACEMENT PROCEDURES

4–1 TAPE TRANSPORT

In order to gain access to the tape transport components, place the recorder in an upright position and remove rear cover, two side panels, and top panel (16 screws total).
Refer to Section 6 for parts lists and exploded views of the transport assembly to aid in the identification of the various components.

4–1–(1) REEL TABLE REPLACEMENT AND HEIGHT ADJUSTMENT

The reel table may be removed by removing three cross head screws accessible from the front of the transport. To adjust the reel table height, loosen two hexagonal socket head screws shown in Fig. 4–1, adjust height and retighten screws.

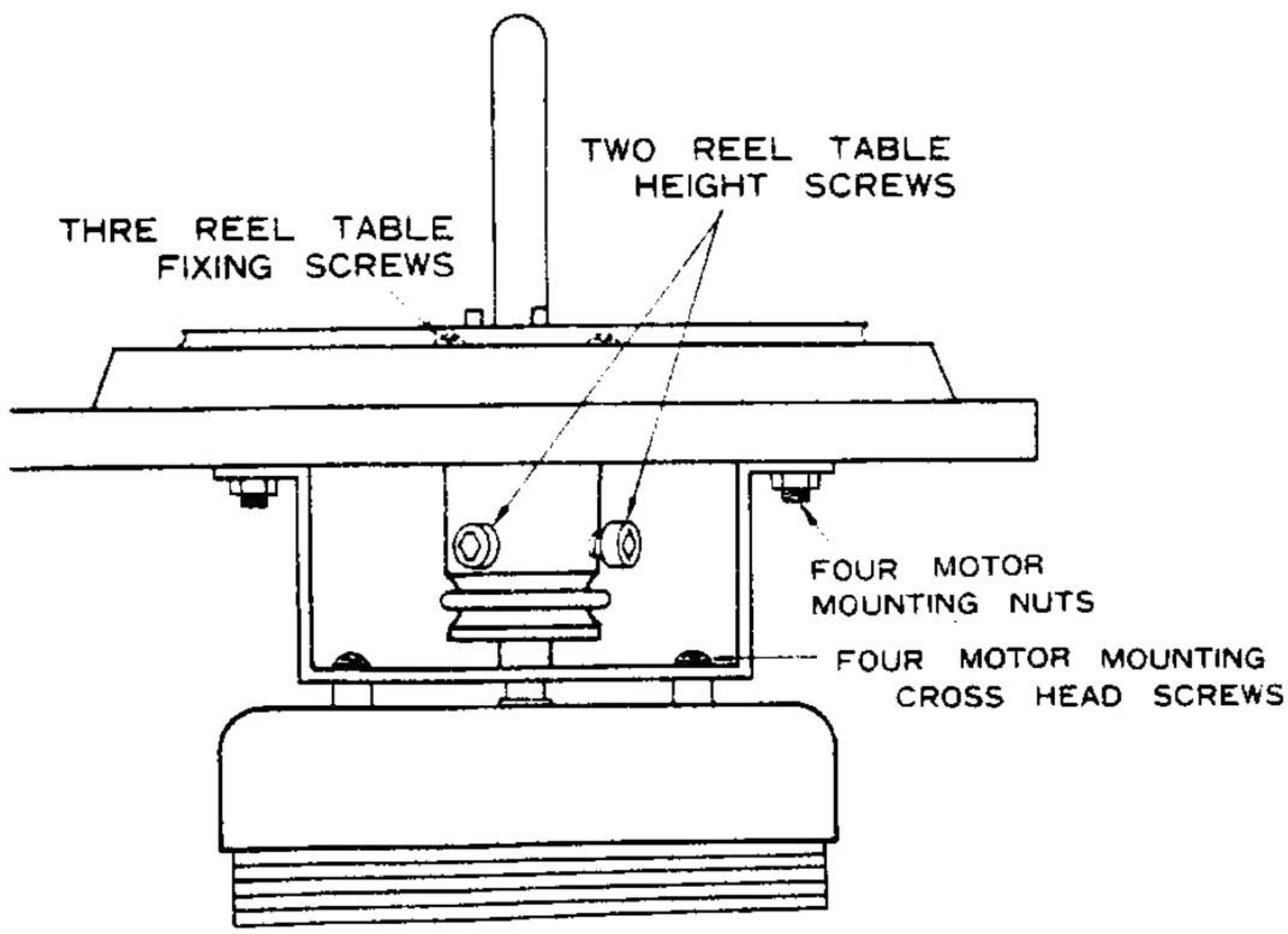

Fig. 4–1 Reel Table and Motor

4–1–(2) SUPPLY OR TAKEUP REEL MOTOR REPLACEMENT

To replace the supply or takeup motor proceed as follows:

1. Loosen two hexagonal socket head screws on the reel shaft holder (Fig. 4–1) and remove reel table and holder.
2. Tag and unsolder motor leads from the attached printed circuit board.
3. Remove four motor mounting M4 nuts.
4. Remove four motor mounting crosshead screws.
5. Install new motor in the reverse order of removal and adjust reel table height.

4–1–(3) POWER TRANSFORMER REPLACEMENT

To replace the power transformer (refer to EXPLODED VIEW 2), proceed as follows:

1. Tag and unsolder all transformer leads from the terminal.
2. Remove four M4 nuts that secures the transformer to the transport. (Ref. No. 2–18)
3. Install new transformer in the reverse order of removal and resolder leads to the terminal of the transformer.

www.hifiengine.com

4–1–(4) CAPSTAN MOTOR REPLACEMENT

The capstan motor should be replaced with servo control printed circuit board assembly, to replace the capstan motor proceed as follows: (Refer to EXPLODED VIEW 4)

1. Remove connector on servo control printed circuit board assembly located above capstan.
2. Remove servo control printed circuit board assembly with mounting plate by turning four M3 crosshead screws "B" on mounting plate.
3. Remove capstan dust cap from face of transport. (Ref. No. 4–3)
4. Remove capstan mounting plate with capstan motor by removing four M4 crosshead screws "A" on the mounting plate.
5. Remove the capstan motor by removing three M4 crosshead screws "C" on the mounting plate and install new capstan assembly in the reverse order.

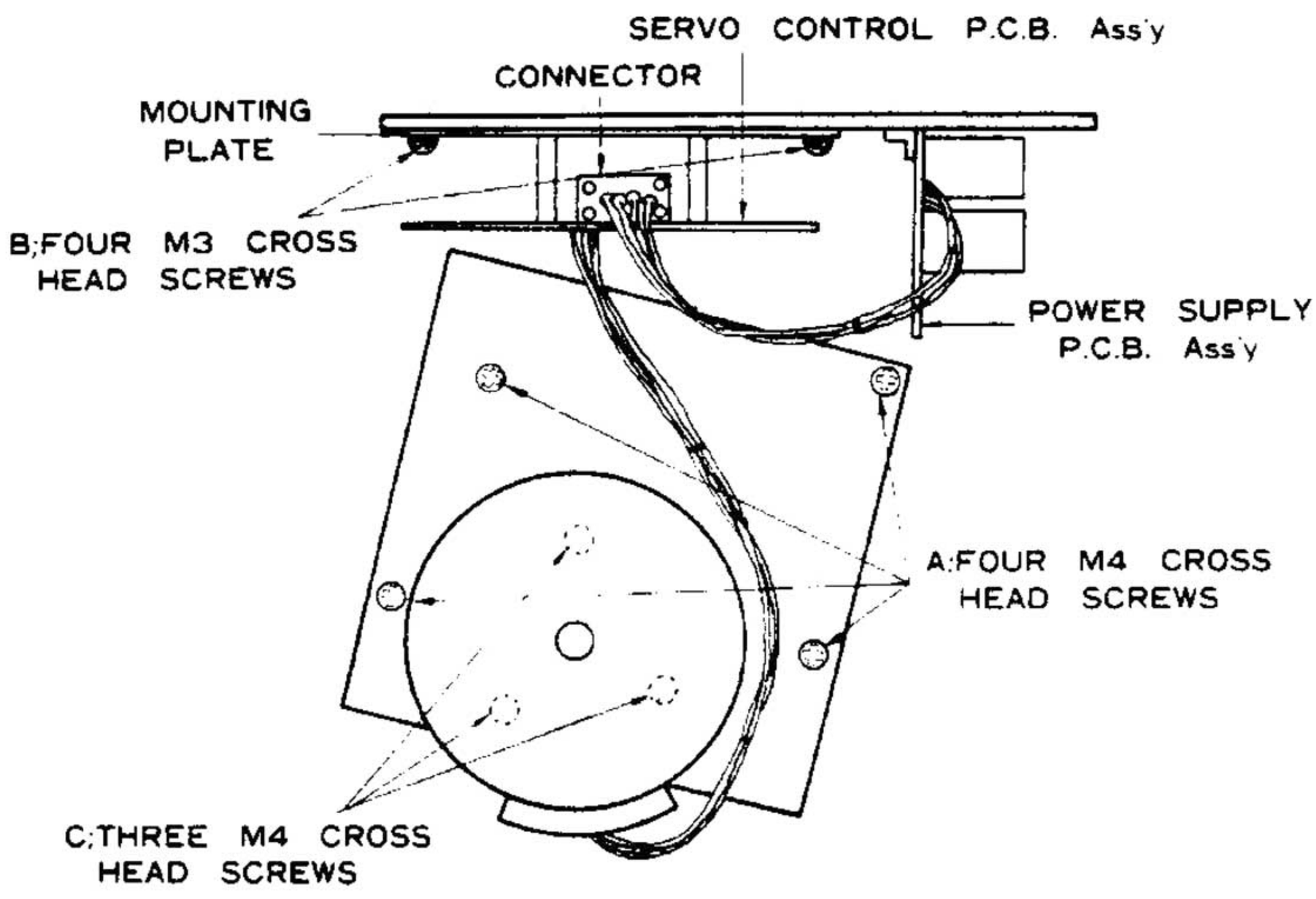

Fig. 4–2 Capstan Motor Location

4–1–(5) BRAKE BAND OR BRAKE SOLENOID REPLACEMENT

When a new brake band or new brake solenoid is installed (Fig. 2–2), it is necessary to position the brake guide and/or brake solenoid to ensure that there is uniform brake band clearance around the brake drum when the solenoid is energized. Also the brake solenoid plunger must bottom in the solenoid housing when the solenoid is energized. When the solenoid is deenergized, the brake band should uniformally contact the drum surface. After installation, perform the Brake Adjustment procedure and the Tape Tension Adjustment procedure given in Section 2 of this manual. After completion of the adjustments place the recorder in play mode for 30 minutes. Then press STOP and PLAY pushbuttons to ensure that the solenoid bottoms when it is hot.

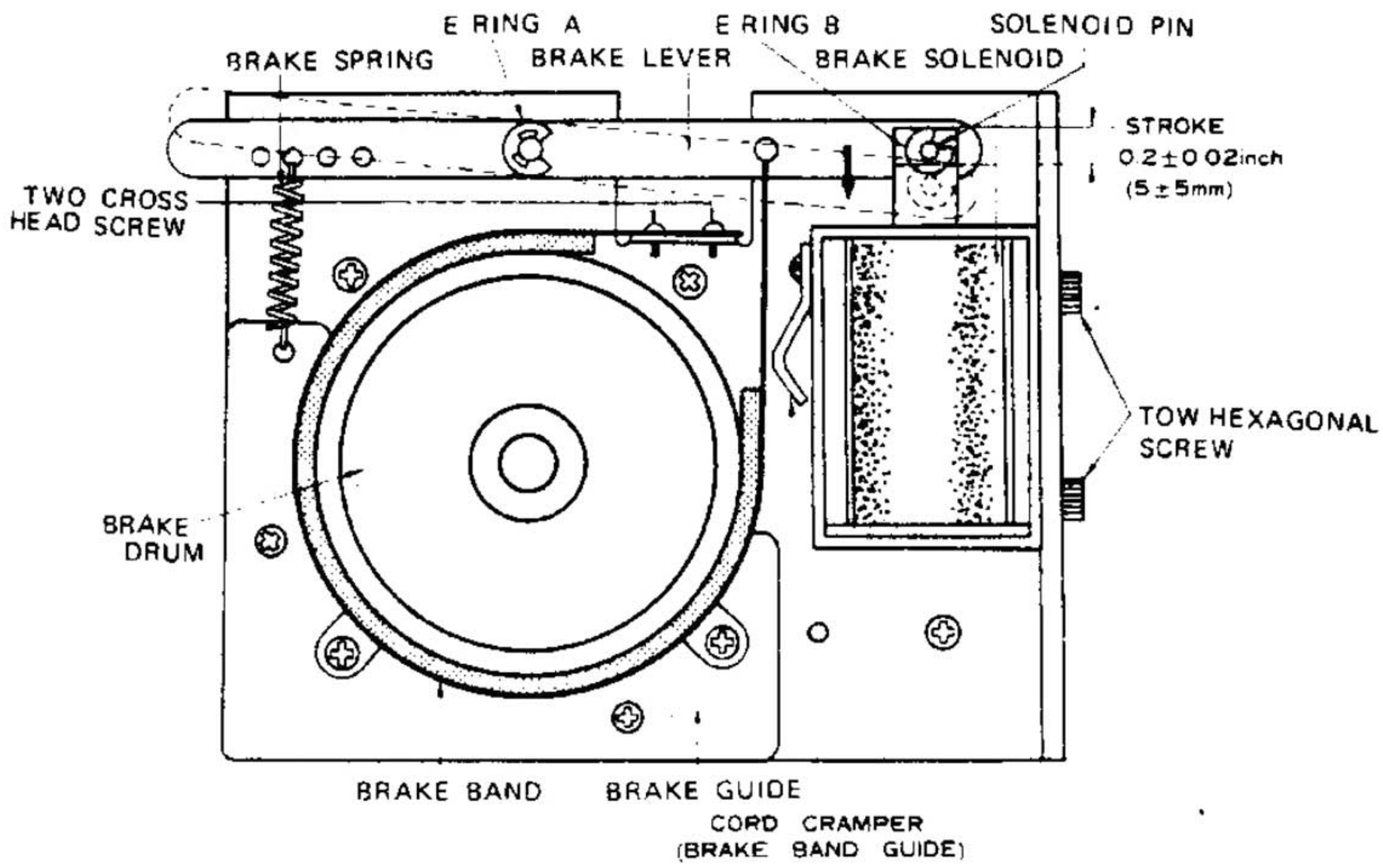

Fig. 4–3 Brake Assembly Location

To replace brake band, proceed as follows.

1. Remove spring pin on brake lever.
2. Remove two cross head screws, and replace brake band.

To replace brake solenoid, proceed as follows.

1. Remove brake spring and remove E ring A.
2. Remove E ring B on solenoid pin and remove solenoid pin.
3. Remove solenoid housing with plunger by removing two hexagonal socket screws.
4. Install new solenoid housing with plunger and set solenoid housing for 0.2±0.002 inch/in position in solenoid plunger stroke from the bottom.

4–1–(6) PINCH ROLLER REPLACEMENT

To replace the pinch roller assembly proceed as follows:

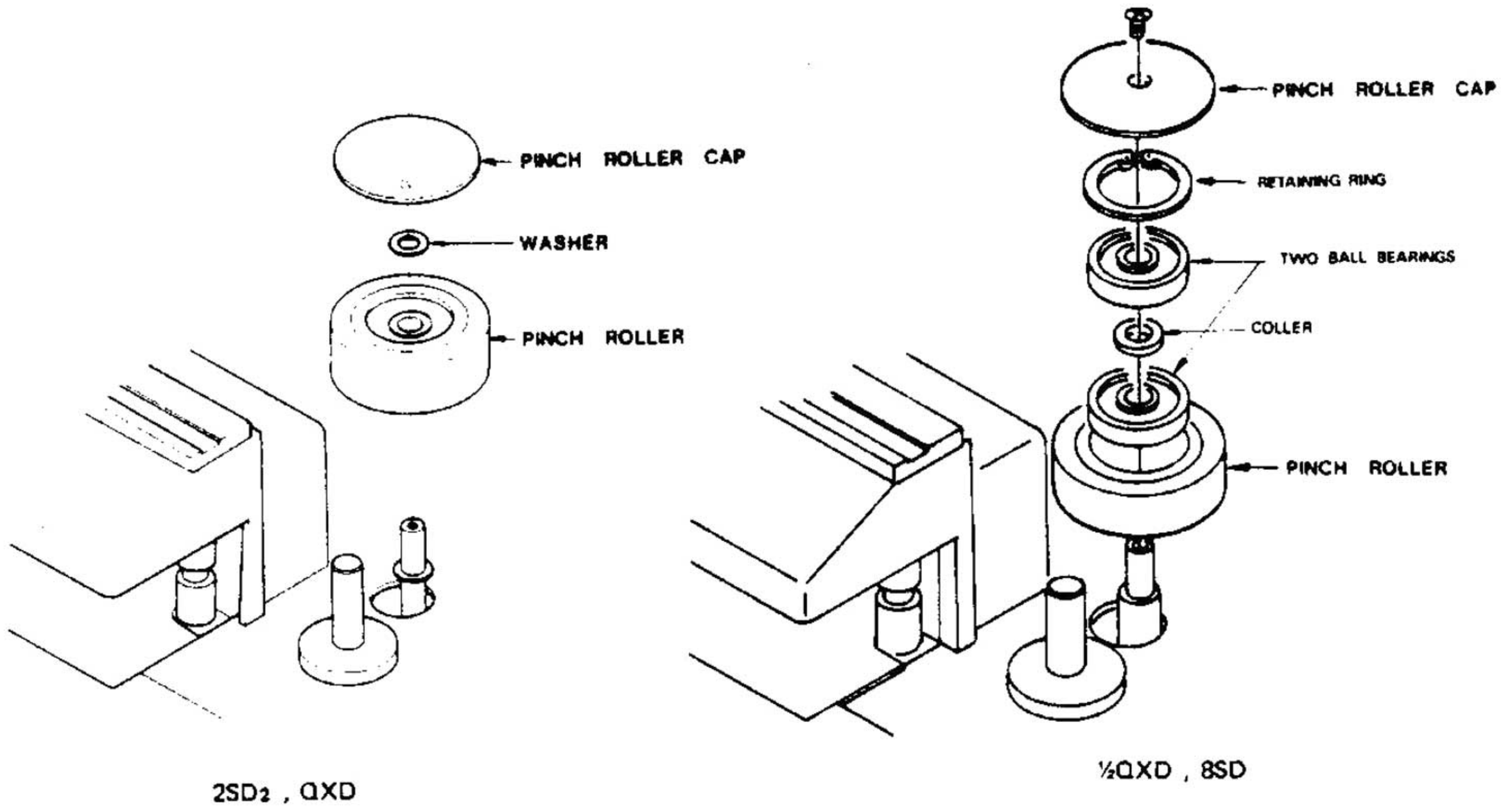

Fig. 4–4 Pinch Roller Removal

1. Remove pinch roller cap. On Models $2SD_2$ or QXD, turn pinch roller cap counter-clockwise. On Models ½QXD or 8SD, remove screw on pinch roller cap.
2. Install new pinch roller. On Models ½QXD or 8SD, replace 2 ball-bearings at the same time.
3. Reinstall nylon washer and pinch roller cap in the reverse order.

4–2 HEAD ASSEMBLY REPLACEMENT

This section provide a description of the head assembly, procedures for changing head stacks and adjustment procedures for adjusting head azimuth (tilt), head height, head zenith (perpendicularity) and tape wrap (racking). These adjustments are required whenever a head stack is replaced. Note that a different replacement and adjustment procedure is provided for Otari Models MX–5050–$2SD_2$, QXD and for Otari Models MX–5050–½QXD, 8SD.

www.hifiengine.com

DESCRIPTION

The head assembly is mounted on three tape-guide posts and secured in place by three screws labled "M" in Fig. 4–5.
The insulating shield for the head assembly printed circuit board is secured by screws labled "S". Each head stack is secured to a bracket by screws labled "W" with a spacer between the bracket and head stack. Each bracket is suspended from the head base by three spring-loaded screws labled "H", "A", and "Z". Screws labeled "W" are used to adjust tape wrap. Screws labeled "H", "A", and "Z" are used to adjust height, azimuth, and zenith.
A head stack may be removed and re-lapped (face resurfaced) if the amount of wear is small and only an indication of poor head-to-tape contact is evident. Poor contact is a result of improper adjustment and is evidenced by loss of high frequency response of the record or reproduce head stack, difficulty in achieving bias peak (record stack), or insufficient erase stack erasure.

HEAD STACK REPLACEMENT

To change a head stack, proceed as follows:

1. Lift head cover, remove AC power cord.
2. Remove three screws labeled "M" and pull out the head assembly from head connector.
3. Tag and unsolder (use low wattage pencil type iron to prevent damage) leads at rear terminal of the head stack.
4. Remove head stack by removing two screws labeled "W".
5. Install new head stack and resolder leads.
6. As a preliminary adjustment, measure the distance between the head base and the bracket at a point near spring-loaded screws "A", "Z", and "H". If necessary adjust screws for equal spacing.
7. Lay a piece of ¼-inch tape over the spacers and head stacks as shown in Fig. 4–6. Note if the leading and trailing wrap angle around the head stack is equal. If not equal, correct by loosening screw "W", adjusting head stack, and retightening screws.
   Remove the three screws and spacers installed in step 7.
8. Remount the head assembly. Perform the appropriate head alignment procedure given below.

www.hifiengine.com

Head alignment and following adjustment are necessary whenever head is replaced.

1. In case of reproduce head replacement.
   A. Reproduce Equalization Adjustment (See 3–5–(3))
   B. SRL Calibration (See 3–5–(4))
2. In case of record head replacement.
   A. Bias Buffer Amplifier Adjustment (See 3–6–(1))
   B. Bias Calibration (See 3–6–(2))
   C. Record Level Adjustment (See 3–6–(4))
   D. Record Level Calibration (See 3–6–(5))
   E. Record Equalization Adjustment (Refer to Instruction Manual)
   F. SEL/REP Level Adjustment (See 3–6–(7))
3. In case of erase head replacement
   A. Bias Buffer Amplifier Adjustment (See 3–6–(1))
   B. Bias Calibration (See 3–6–(2))

RECORD OR REPRODUCE HEAD ADJUSTEMNT

Follow the procedure for Reproduce Amplifier Alignment given in Section 3 of this manual. For the final adjustment of a record stack, the height and azimuth adjustment may be accomplished in the same manner as for a reproduce head stack by playing back an alignment tape with the recorder in the selective reproduction mode (SEL/REP switches "in"). Use the 10 kHz tone for azimuth adjustment.

ERASE HEAD ALIGNMENT

Erase head azimuth is not critical, however wrap angle and head height relative to the record head is important to achieve maximum efficiency. Poor erasure is often caused by misalignment of the erase head. Before making any attempt to adjust the erase head stack, an entire electronic alignment procedure (reproduce, record, and bias amplifier alignment) should be performed so that the record and reproduce head heights are correct, SRL/CAL setting is correct, and bias and record levels are properly calibrated. If should be also noted that in some cases, high coercivity tape can be the cause of poor erasure.

An approximate erase head adjustment can be accomplished using headset or a speaker/amplifier. However, for precise alignment, a wave analyzer should be used. Proceed as follows:

www.hifiengine.com

1. Follow the procedure for Erasure Test steps 1 through 6 given in Section 3 of this manual.
2. Observe reading on wave analyzer and turn screw "H" (Fig.4–5) ¼ turn clockwise. If the reading decreased, turn screw "A" and "Z" ¼ turn clockwise. If the reading increased when "H" was turned ¼ turn clockwise, turn "H" counterclockwise past the original setting to ¼ turn counterclockwise. If the reading decreased, turn screw "A" and "Z" counterclockwise by the same amount.
3. Repeat step 2 in small increments to achieve a minimum reading on the wave analyzer. Typical amount of erasure should be 65 dB or better.
   Note: After "H" is turned, be sure to turn "A" and "Z" the same amount.
4. If the adjustment of erase head height alone cannot achieve satisfactory erasure, set screw "H", "A", and "Z" for minimum reading on the wave analyzer.
   Note that there are two vertical gaps on the face of the erase head. The trailing gap has the most effect on erasure and must be in good contact with the tape. Loosen screws "W" slightly and rotate the erase head stack for a minimum reading on the wave analyzer. Tighten screws "W".

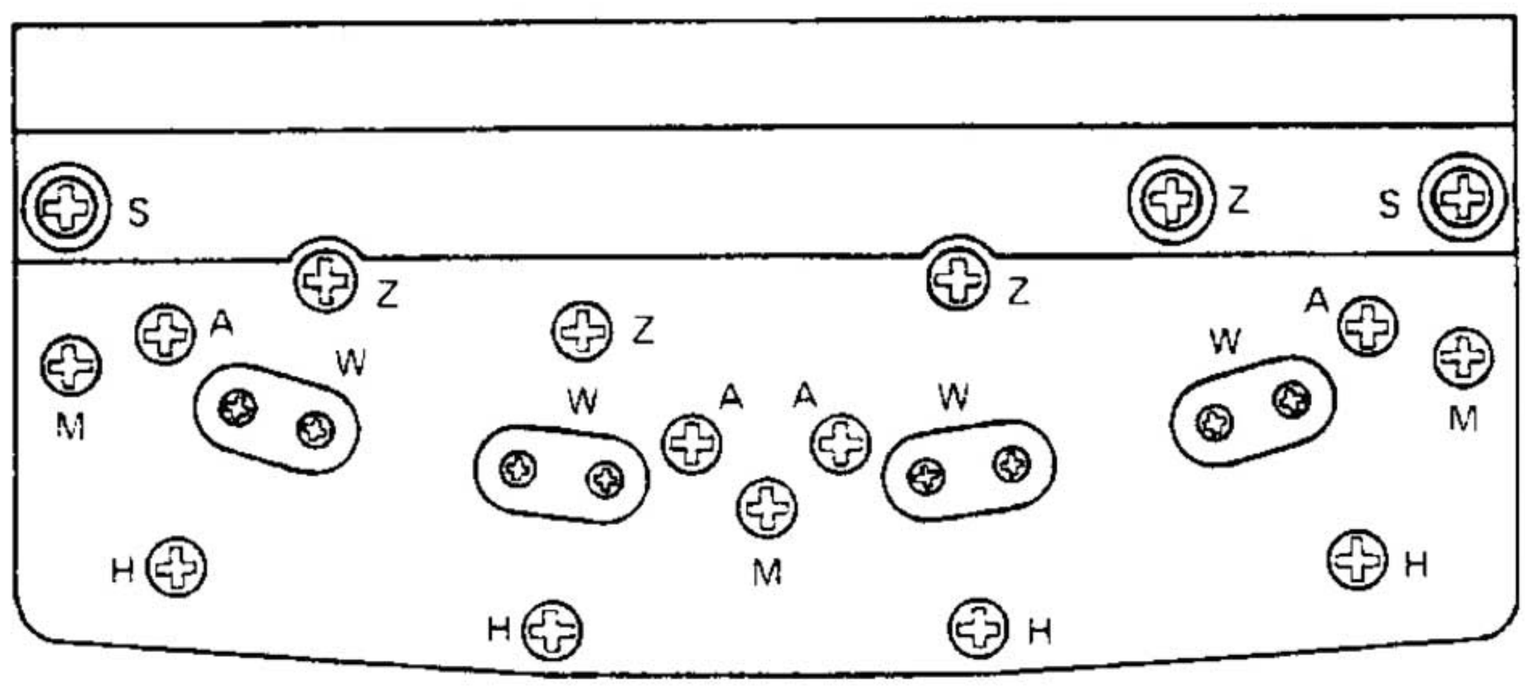

Fig. 4–5 Top View of Head Assembly

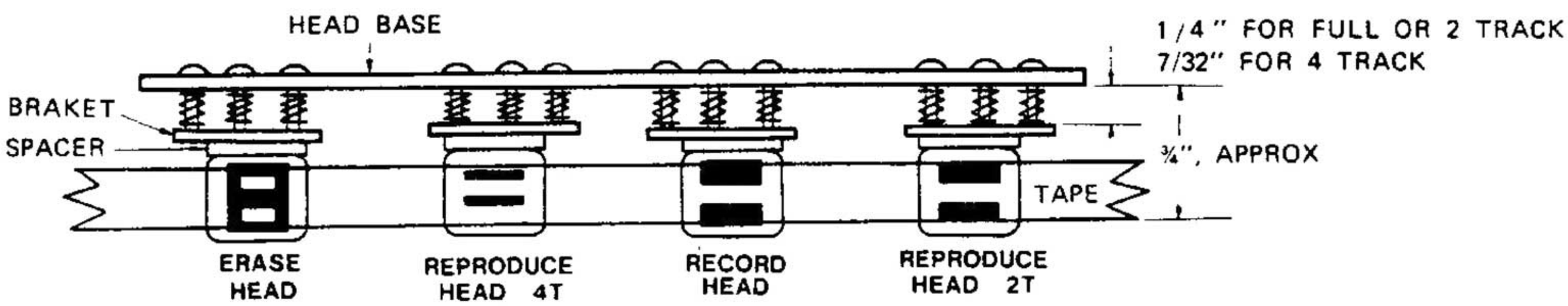

Fig. 4–6 Front View of Head Assembly

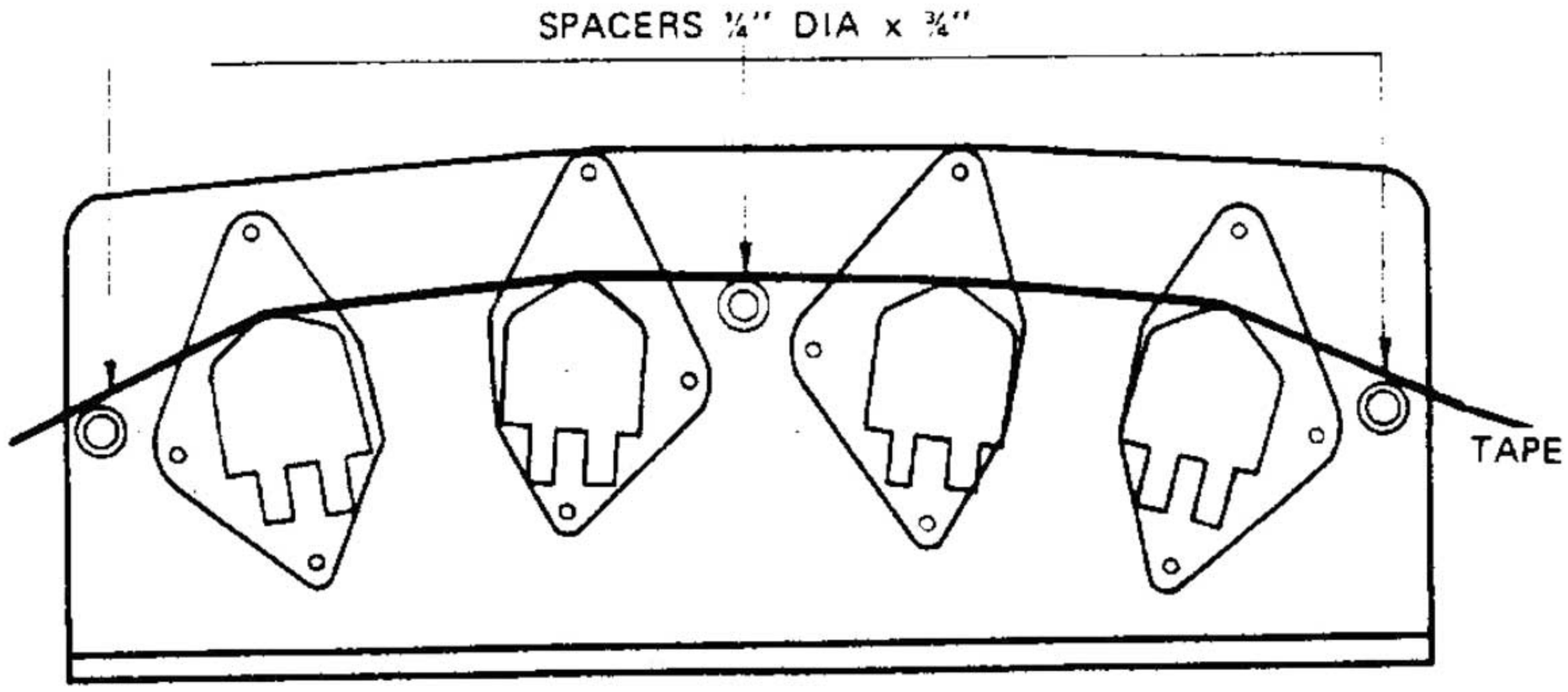

Fig. 4–7 Bottom View of Head Assembly

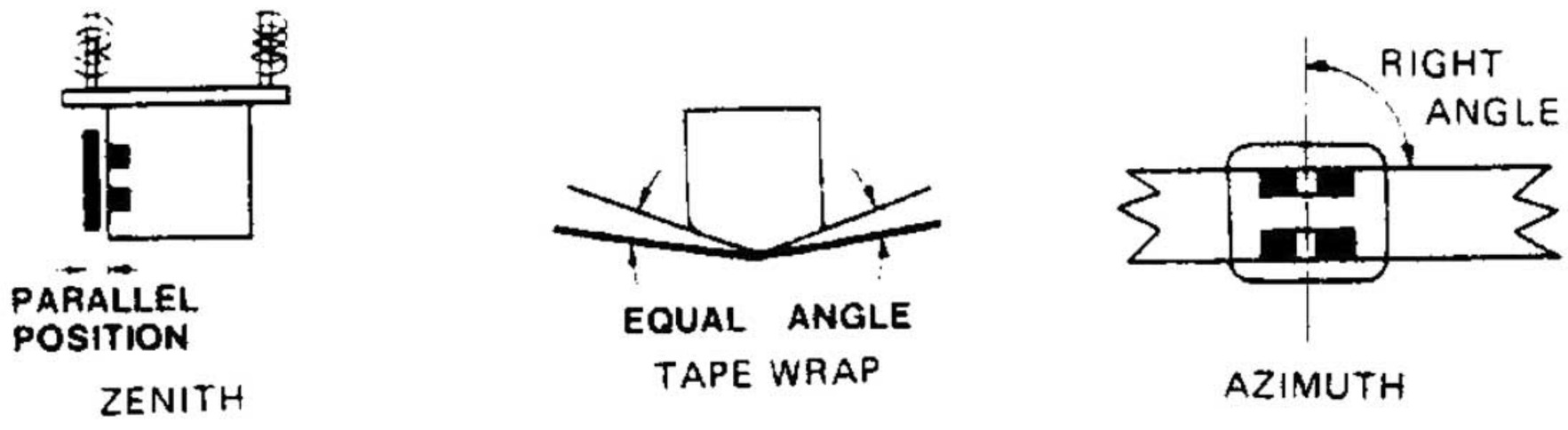

Fig. 4–8 Head Alignment

4–2–(2) For MX–5050 ½QXD or 8SD

DESCRIPTION

The head assembly is mounted on three screws labeled "M" in Fig. 4–9.
Each head base is directly secured to assembly base by screws labeled "F".

HEAD STACK REPLACEMENT

It is important that power supply must be removed before replacing the head.
For Model ½QXD, proceed as follows:

1. Remove three screws labeled "F" and unsolder the head leads on the head P.C.B. assembly.
2. Install new head in reverse order.

For Model 8SD, proceed as follows:

1. Reproduce head or both record and erase heads are replaced with head connector. Pull out head connector (MR16M) and remove head assembly by removing three screws labeled "F".
   Install new head assembly in reverse order.
2. Either of record head and erase head is replaced, unsolder the head leads from head connector and remove head assembly by removing three screws labeled "F".
   Install new head assembly in reverse order and resolder the head leads.

Head alignment and following adjustment are necessary whenever head is replaced.

1. In case of reproduce head replacement.
   A. Reproduce Equalization Adjustment (See 3–5–(3))
   B. SRL Calibration (See 3–5–(4))
2. In case of record head replacement.
   A. Bias Buffer Amplifier Adjustment (See 3–6–(1))
   B. Bias Calibration (See 3–6–(2))
   C. Record Level Adjustment (See 3–6–(4))
   D. Record Level Calibration (See 3–6–(5))
   E. Record Equalization Adjustment (Refer to Instruction Manual)
   F. SEL/REP Level Adjustment (See 3–6–(5))
3. In case of erase head replacement
   A. Bias Buffer Amplifier Adjustment (See 3–6–(1))
   B. Bias Calibration (See 3–6–(2))

HEAD ALIGNMENT

1. Fix head lightly and adjust head so as the tape will touch the head left and right symmetrically as shown in the Fig. 4–1.1 (C)
   (Paint the head face with a soft crayon, run the tape in about ten sec, and see the crayon marks rubbed away by the tape.)
2. If head height is incorrect, add a thin seet (shim) between the head and the head base as shown in fig. 4–11(b) and adjust head height for identical top and bottom head pole with the width of the threaded tape as shown in fig. 4–10.
3. Azimuth adjustment for erase head is not necessary.
   Azimuth adjustment for reproduce head is adjusted by adding a thin seet (shim) for maximum output reading in test tape reproducing mode.
   Azimuth adjustment for record head is adjusted by adding a thin seet (shim) in record-reproduce mode after reproduce head adjustment is complete.

www.hifiengine.com

If head height is incorrect in azimuth adjustment, readjust height and azimuth adjustment.
Since these adjustment may be affected by the clamping effect of screw labeled "F", tightly fix the head assembly before making these adjustment.
Refor to Section 3 to aid for azimuth adjustment procedure.

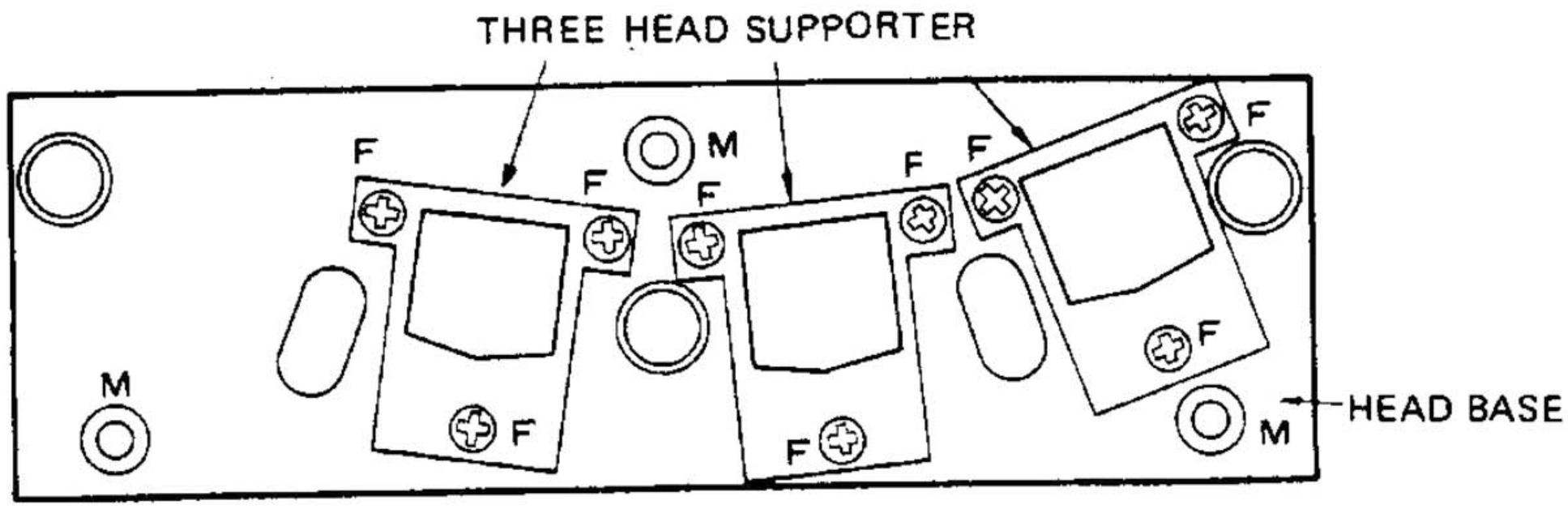

Fig. 4–9 Top View of Head Assembly

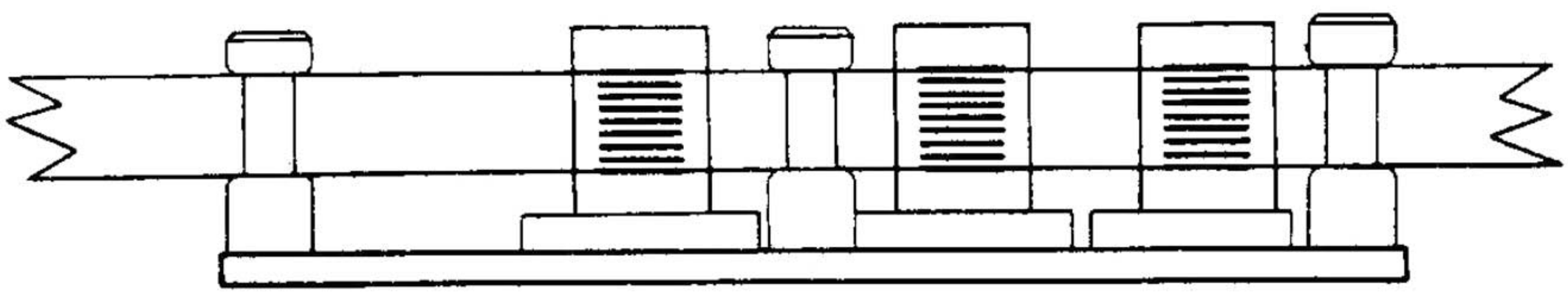

Fig. 4–10 Front View of Head Assembly

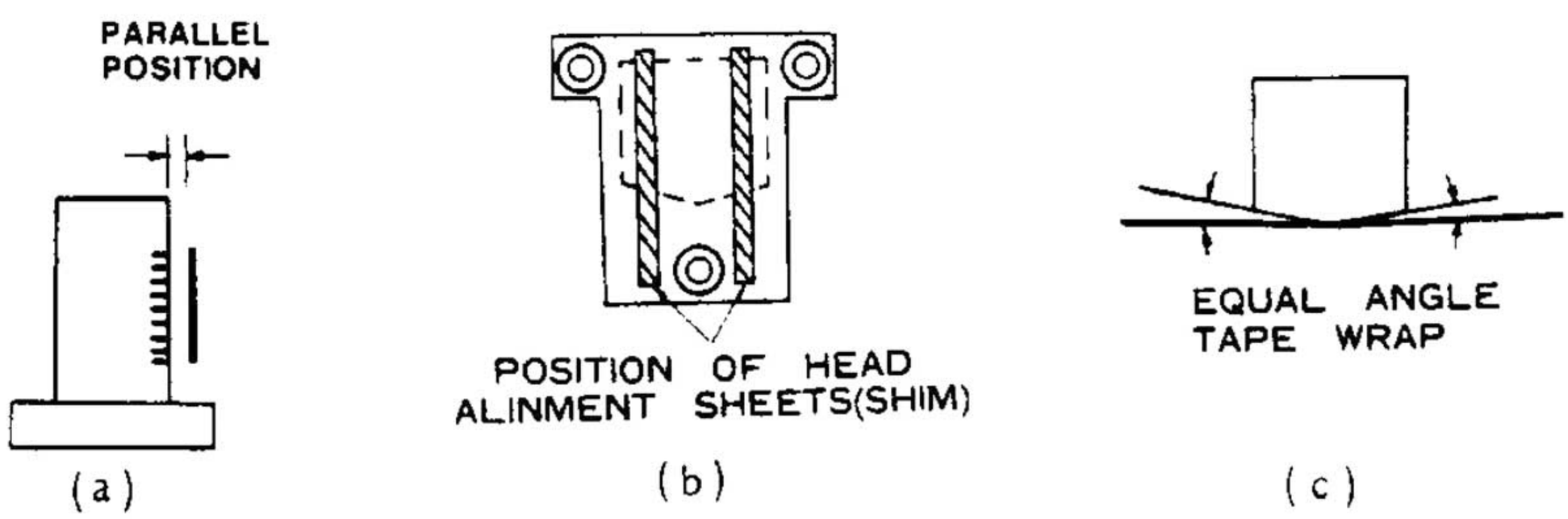

Fig. 4–11 Head Alignment

4–2–(3) ACCESS TO ELECTRONIC ASSEMBLY

The record/reproduce electronics is composed on plug-in type printed circuit boards.
Access to electronics assembly may be obtained by following procedure.
Refer to EXPLODED VIEW 12, 13, 14, and 15 in Section 6 to aid access to electronic assembly.

1. Remove the connectors on the rear of electronics.
2. Pull the (Ref. No. 12–2, 12–4) off, and remove the face panel by removing the (12–6) at the both side on the face panel.
3. Remove (14–1) at the both side on the top panel and draw the electronics out.

4–3 INSTALLATION OF OPTIONAL TRANSFORMER

4–3–(1) INSTALLATION OF INPUT TRANSFORMER

Fig. 4–12 shows circuity of unbalanced input and balanced input. To install input transformer, proceed as follows:

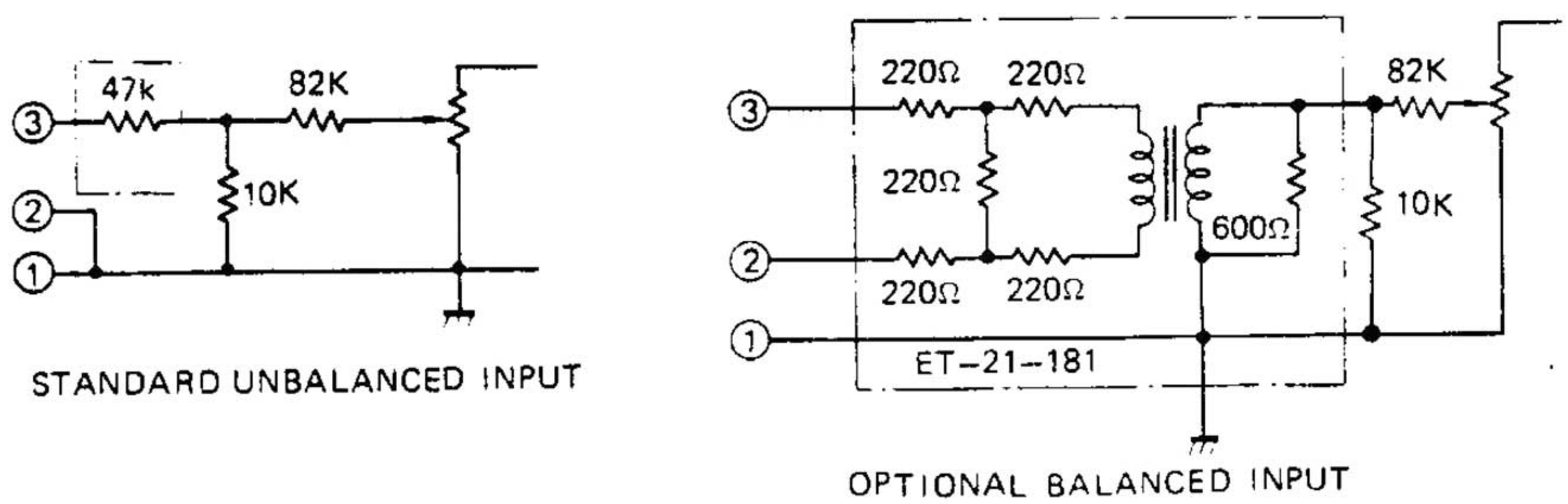

Fig. 4–12 Input Circuitry

1. Remove rear panel by removing part No. 15–49 at the both side on rear panel.
2. Install transformer bracket to left side inside the panel as shown in Fig. 4–13 and insert the input transformer.
3. Unsolder wires from XRL connector and wire as shown in Fig. 4–14.
4. Change leads from terminal 3 and 8 of connector to terminal 1 and 10.
5. Install rear panel in reverse order.
6. After all of above modification, test record.

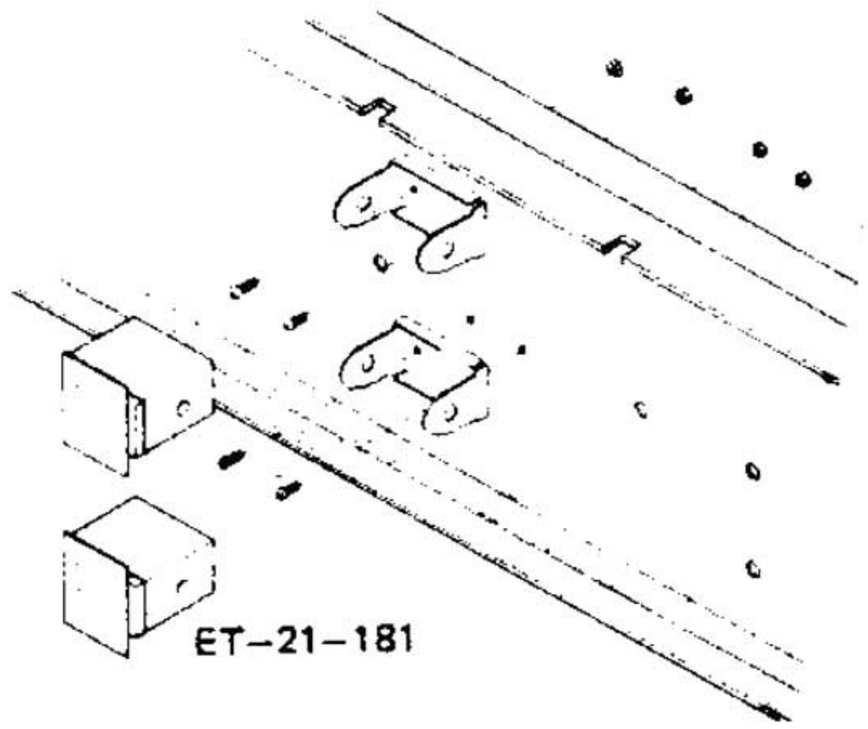

Fig. 4—13 Input Transformer Installation

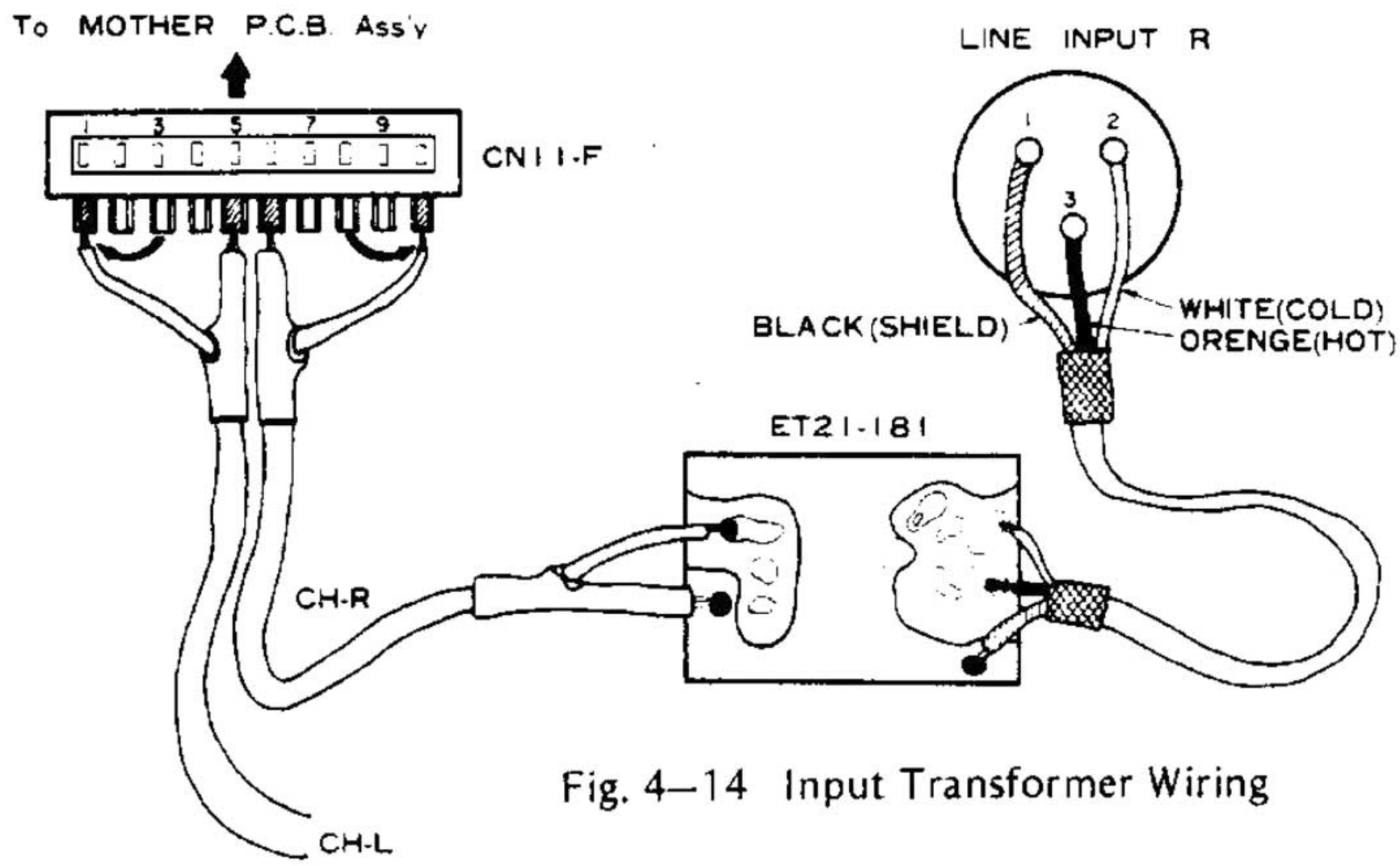

Fig. 4—14 Input Transformer Wiring

4—3—(2) INSTALLATION OF OUTPUT TRANSFORMER

Fig. 4—15 shows circuity of unbalanced output and balanced output. To install input transformer, proceed as follows:

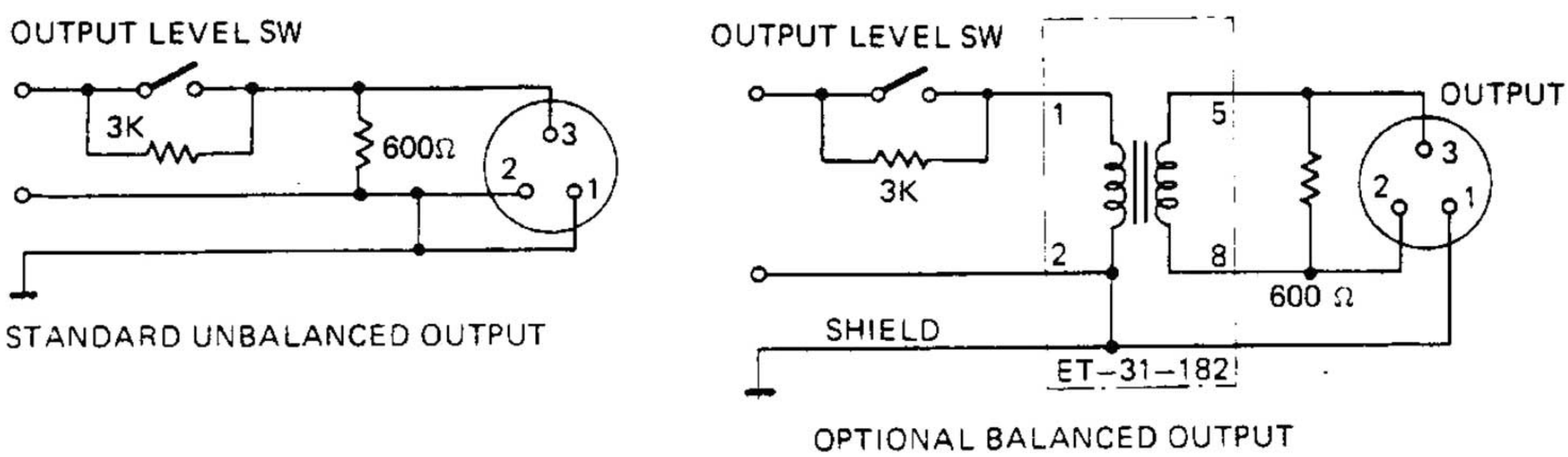

Fig. 4—15 Output Circuity

1. Remove rear panel by removing four screws at the both side on rear panel.
2. Install output transformer to about center inside the panel as shown in Fig. 4–16.
3. Unsolder wires from XRL connector and wire as shown in Fig. 4–17.
4. Install rear panel in reverse order.
5. After above wiring, adjust reproduce level (refer to 3–5–(4) SRL ADJUSTMENT in Section 3).

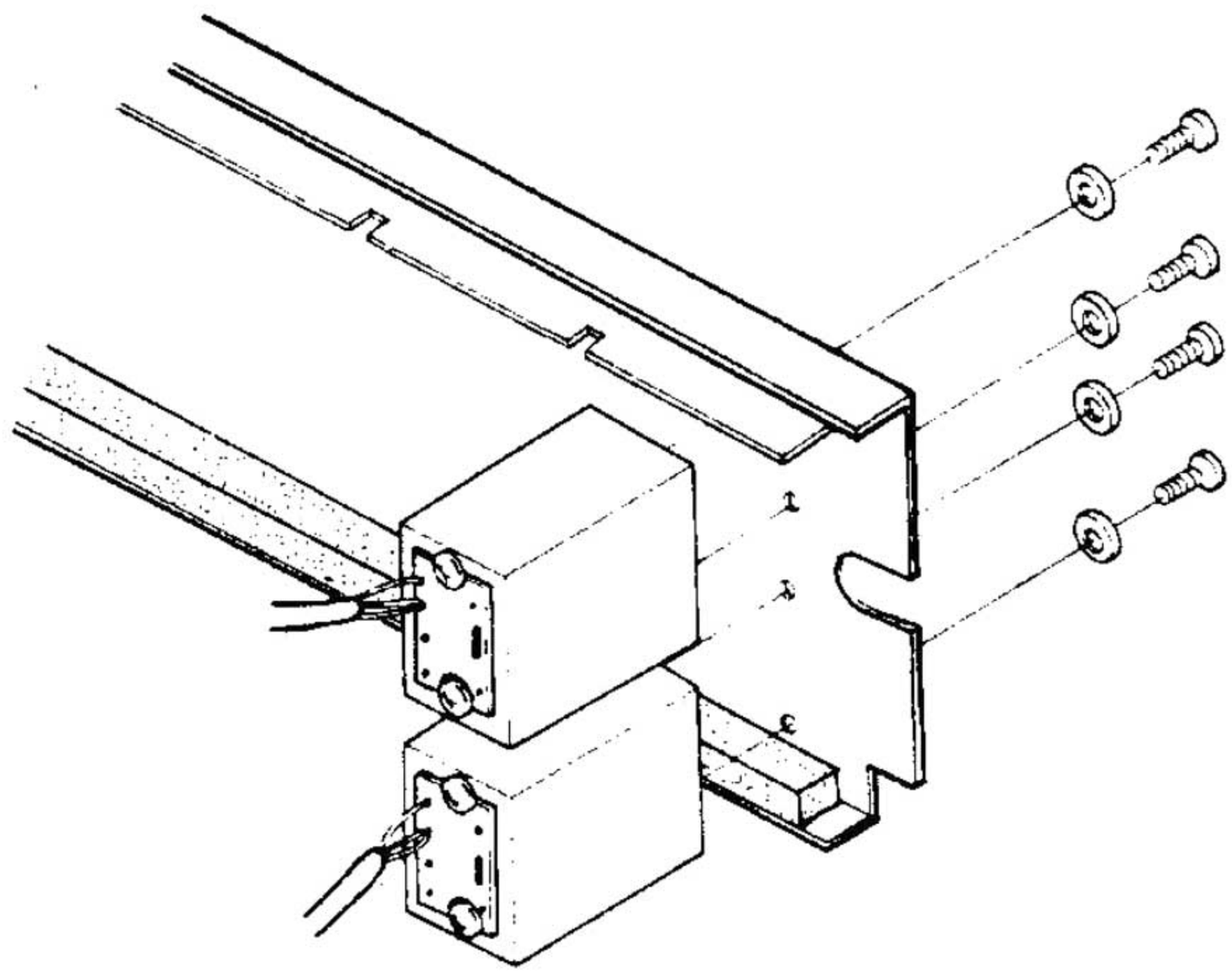

Fig. 4–16 Output Transformer Installation

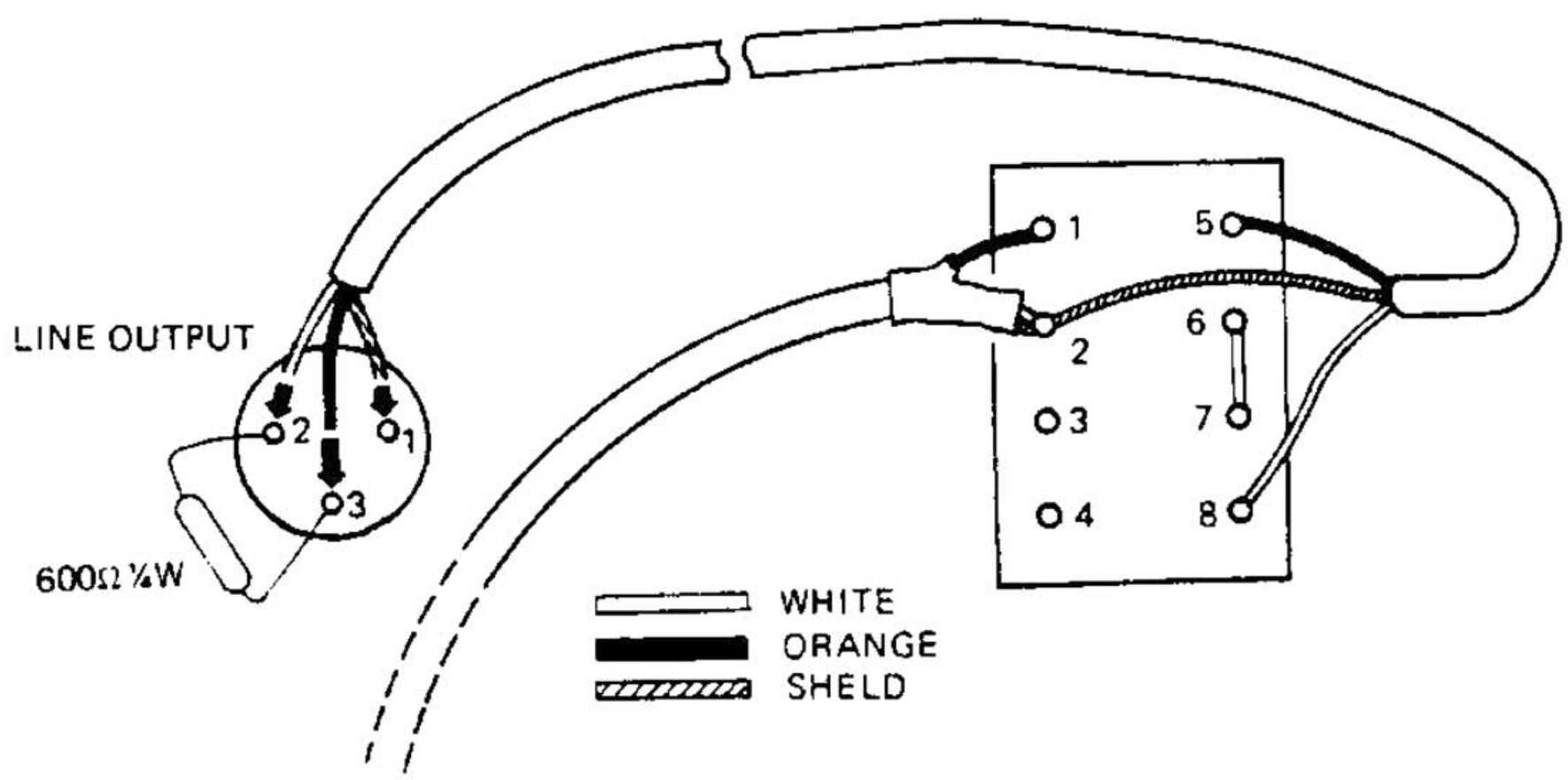

Fig. 4–17 Output Transformer Wiring

SECTION 5
TROUBLESHOOTING

5–1 PRELIMINARY PROCEDURES

If a problem should occur with the recorder, check that the following items are correct before proceeding with troubleshooting procedures. As an aid in troubleshooting, refer to the schematic diagram and parts lists included in this manual.

1. Head stacks are cleaned and demagnetized.
2. Head azimuth and height are correct.
3. Record bias has been adjusted properly.
4. Recommended tape has been used.
5. Input and/or output connectors are correctly wired.
6. Ac line voltage is within ± 10% of indicated power requirement.
7. All operational switches have been correctly set.
8. Adjustment procedures have been correctly made using accurate test equipment.

5–2 TROUBLESHOOTING HINTS

Some of the more common problems and possible causes are listed in Table 5–1.

Table 5–1 Troubleshooting Hints

SYMPTOM TAPE TRANSPORT	POSSIBLE CAUSE
Power switch is on but meter does not illuminate and transport does not function.	Fuse is blown, ac power cord is defective, or power switch is defective.
Transport functions but meter does not illuminate and meter does not function.	Connecting cable is removing
Transport function and meter illuminates but no recording and reproducing.	Amplifier power supply (+29Vdc) is defective.
Reproduce functions but record does not function or equalization Relay does not move.	Amplifier power supply (+24Vdc) is defective.

www.hifiengine.com

Transport does not function.	Transport power supply (+5Vdc or +24Vdc) is defective or tension arm safety switch is defective.
Capstan does not rotate.	Tension arm safety switch is defective, capstan motor power supply (+24Vdc) is defective or capstan motor fuse is blown.
No play mode function.	Control circuit (PA–316) is defective (Q1 is defective) or pinch roller solenoide is defective.
No F.FWD mode function.	Control circuit (PA–316) is defective (Q2 is defective).
No rewind mode function.	Control circuit (PA–316) is defective (Q3 is defective).
Record lamp on transport does not illuminate and no record mode function.	Control circuit (PA–316) is defective (Q4 is defective).
Brake solenoide does not move.	Brake solenoide is defective or brake adjustment (Stroke is incorrect).
Tape speed is incorrect.	Capstan servo control is defective or pinch roller adjustment is incorrect (not bottomed).

RECORD/REPRODUCE ELECTRONICS

Record lamps illuminate but no recording.	Bias master oscillator (PA–315) is defective or bias power supply (+29Vdc) is defective.
Record lamps illuminate but one of channels no recording.	Bias buffer amplifier is defective, record head is defective or record cable is open.
One of channels no recording and the record lamp does not illuminate.	Record selector switch is defective.
Recording function but no erasing.	Erase head is defective or erase head cable is disconnecting.
Equalization Relays do not move.	Q1 on transport mother board (PA–315) is defective or speed switch is defective.

www.hifiengine.com

SECTION 6

PARTS LISTS AND SCHEMATICS

www.hifiengine.com

PARTS LIST 1

Ref. No.	Description	Parts No.	Notes
1-1	Screw	EZ-09-M3x25	
1-2	Display Washer	TY-800-021	
1-3	Sheet	TY-800-017	
1-4	Wood Screw	EZ-09-M3.5x20	
1-5	Protector	CS-264-005	
1-6	Case Top Board	CS-274-008	
1-7	Case Side Board	CS-274-002	
1-8	Latch	CA-39-C-15	
1-9	Wood Screw	EZ-09-M3.1x16	
1-10	Cap Screw	EZ-09-M4x25	
1-11	Display Washer	TY-800-014	
1-12	Under Cover	CS-274-005	
1-13	Screw	EZ-09-M3x8	
1-14	Case Bottom Board	CS-274-010	

www.hifiengine.com

EXPLODED VIEW 1

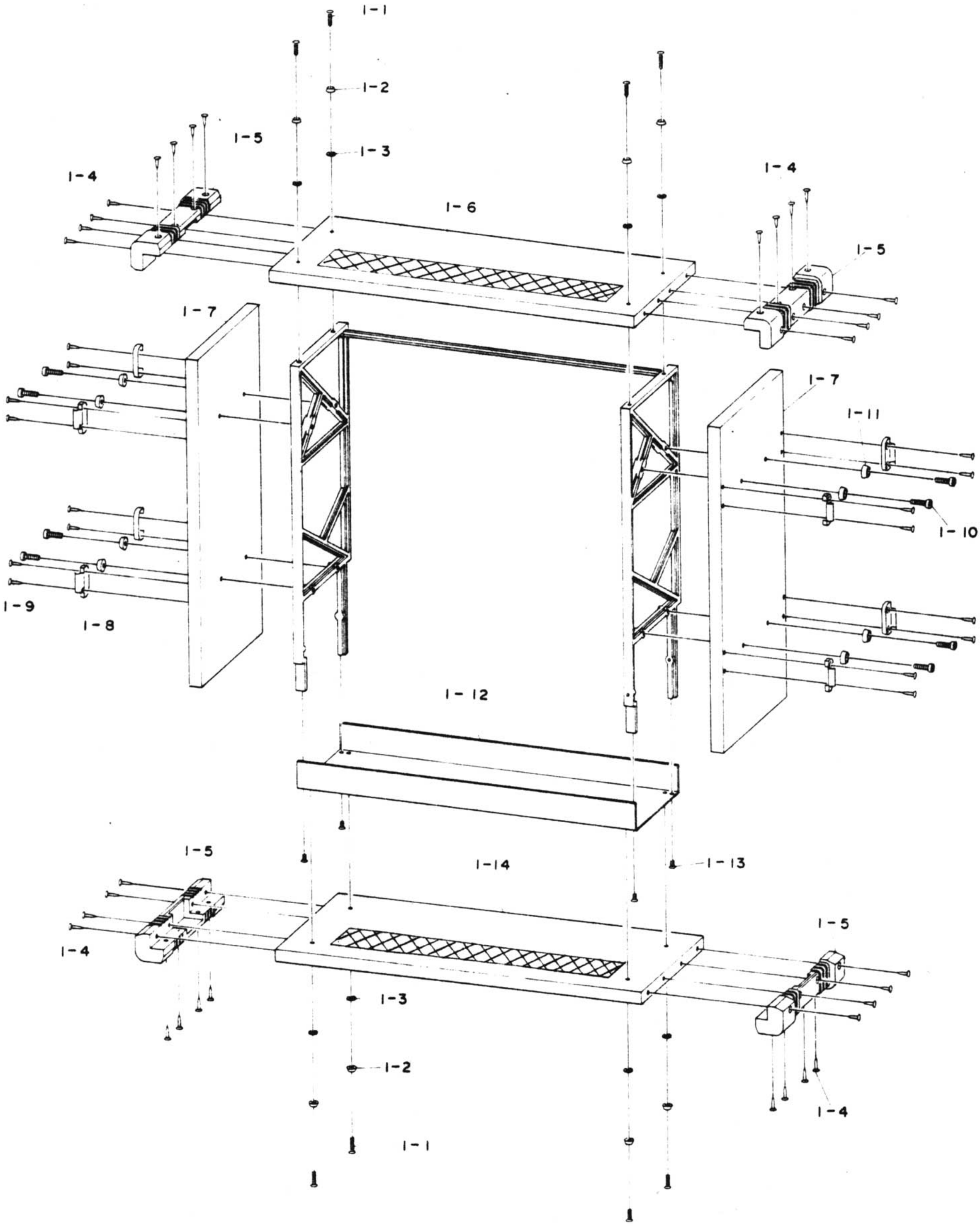

PARTS LIST 2

Ref. No.	Description	Parts No.	Notes
2-1	Screw	EZ-09-M3x20	
2-2	Display Washer	TY-800-021	
2-3	Sheet	TY-800-017	
2-4	Display Panel	TD-5250D-005	
2-5	Screw	EZ-09-M3x14	
2-6	Display Panel	TD-5250D-003	
2-7	Screw	EZ-09-M4x12	
2-8	Screw	EZ-09-M4x14	
2-9	Mounting Base	TD-5250D-001	
2-10	W-W Resistor	RS-99-KNH40V1S-600ohm	
2-11	W-W Resistor	RS-99-KNH30V2S-200ohm	
2-12	Power Transfomer	ET-11-199(8SD,½QXD)	
		ET-11-209(QXD,$2SD_2$)	
2-13	Frame	TD-5251D-001	
2-14	Screw	EZ-09-M4x10	
2-15	Frame Stud	TD-5010-008	
2-16	Plain Washer	EZ-09-M4	
2-17	Spring Washer	EZ-09-M4	
2-18	Nut	EZ-09-M4	
2-19	Panel Supporter	TD-5250-006	
2-20	Screw	EZ-09-M3x8	
2-21	Plain Washer	EZ-09-M3	
2-22	Screw	EZ-09-3x105	
2-23	Screw	EZ-09-M3x90	
2-24	Nut	EZ-09-M3	
2-25	Spring Washer	EZ-09-M3	
2-26	Cover	TD-5250D-008	
2-27	Connector Panel	TD-5250D-007	
2-28	Cap Screw	EZ-09-M4x6	
2-29	Screw	EZ-09-M3x8	

www.hifiengine.com

EXPLODED VIEW 2

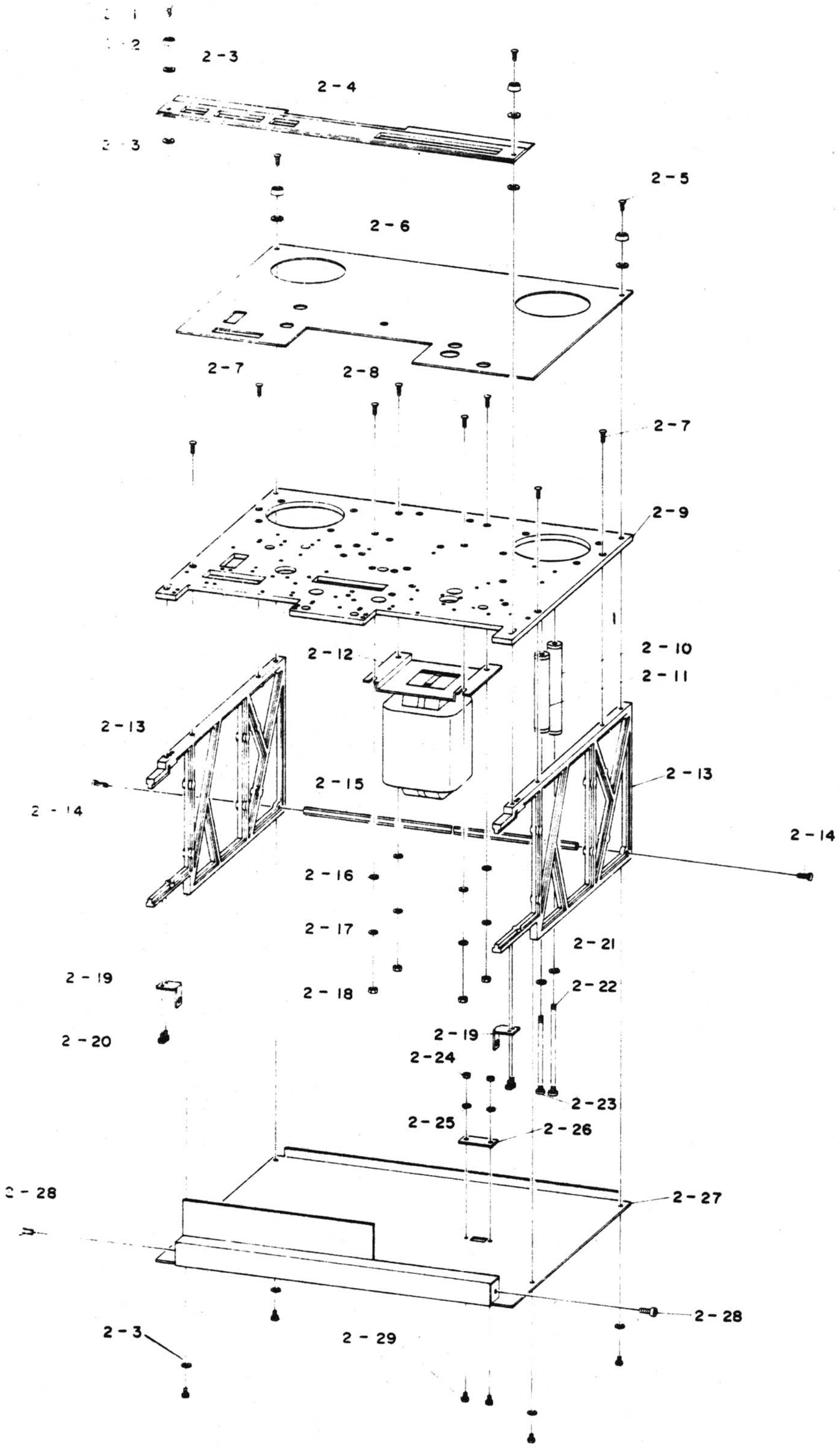

PARTS LIST 3

Ref. No.	Description	Parts No.	Notes
3-1	Reel Clamper	[redacted] REPLACED BY	TW-670 (4)
3-2	Screw	EZ-09-M4x8	
3-3	Reel Table } ASSY.	~~TW-424-001~~ REPLACED BY	RW4J001
3-4	Reel Shaft Holder } ASSY.	~~TW-424-002~~	
3-5	Cap Screw	EZ-09-M4x10	
3-6	Reel Protector	TW-424-009	
3-7	Display Panel	TD-5250D-003	
3-8	Screw	EZ-09-M4x14	
3-9	Mounting Base	TD-5250D-001	
3-10	Switch Supporter	PA-282-003	
3-11	Screw	EZ-09-M3x6	
3-12	Rotary Switch	SW-99-HZR0036-01-010	
3-13	Screw	EZ-09-M2x6	
3-14	Belt	TB-5070-16	
3-15	Screw	EZ-09-M4x10	
3-16	Reel Motor Supporter	TW-421-018	
3-17	Spring Washer	EZ-09-M4	
3-18	Nut	EZ-09-M4	
3-19	Reel Motor	EM-506-019	
3-20	Capacitor Holder L	TW-421-017L	
3-21	Capacitor Holder R	TW-421-017R	
3-22	Brake Base L	TW-421-009	
3-23	Brake Base R	TW-421-007	
3-24	Cap Screw	EZ-09-M3x8	
3-25	Brake Guide	TW-421-004	
3-26	Spring For 8SD or ½QXD:	SG-100-068, For QXD or 2SD2:	SG-100-052
3-27	Brake Arm	TW-424-008	
3-28	Retaining Ring	EZ-09-ETWJ-2	
3-29	Brake Band Assembly	TW-424-00C	
3-30	Rolled Pin	EZ-09-3dx16	
3-31	Brake Dram	TW-424-007	
3-32	Retaining Ring	EZ-09-ETWJ-2	
3-33	Solenoid Pin	TY-400-015	
3-34	Cord Clamper	EZ-09	
3-35	Solenoid	SO-334 DC24V	
3-36	MP Capacitor	CD-99-MPL-5.5microF	
3-37	Plain Washer	EZ-09-M3	

www.hifiengine.com

EXPLODED VIEW 3

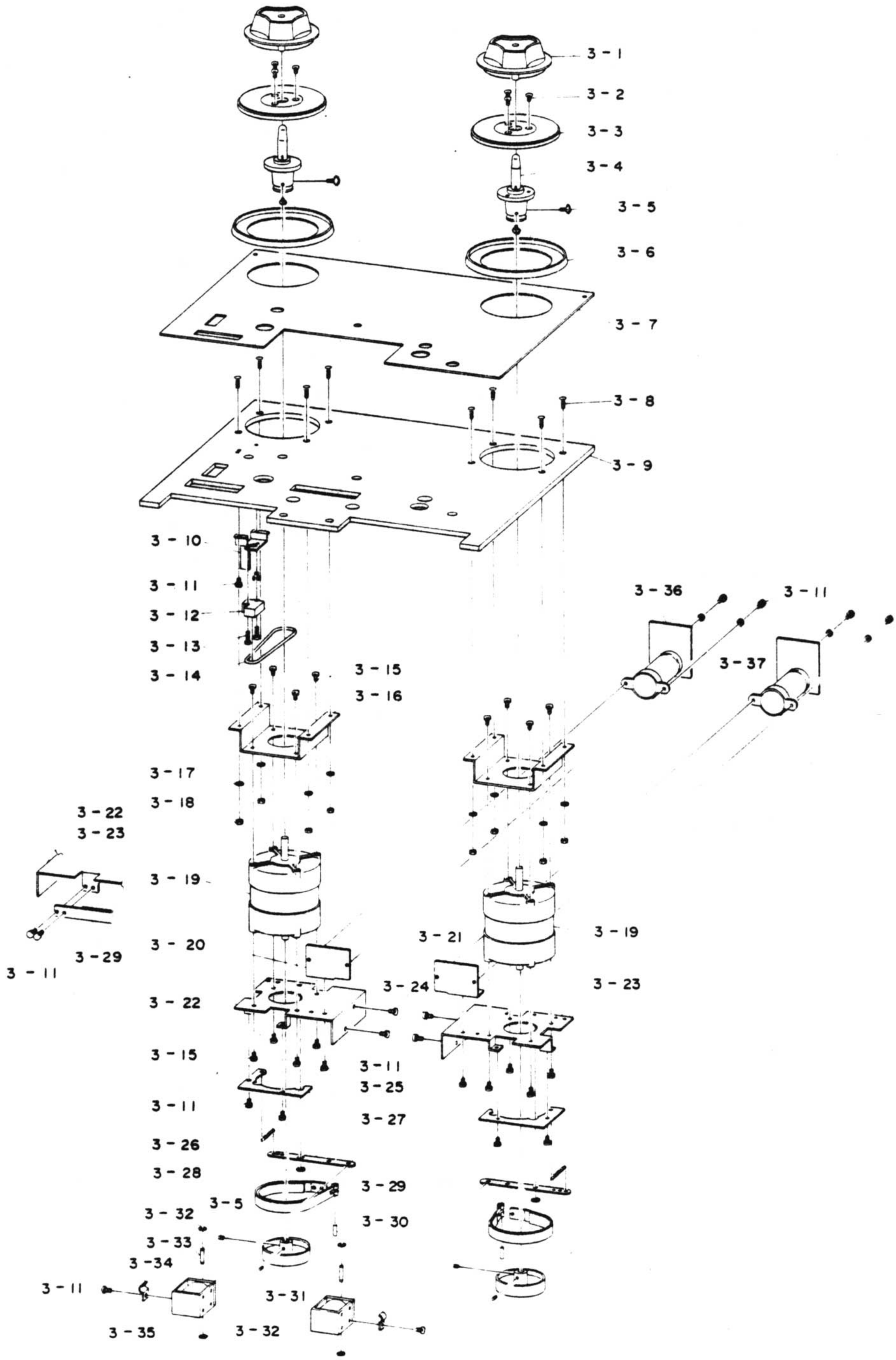

PARTS LIST 4

Ref. No.	Description	Parts No.	Notes
4-1	Knob	NB-31-037	
4-2	Set Screw	EZ-09-M3x3	
4-3	Dust Cap	TC-423-007	
4-4	Display panel	TD-5250D-003	
4-5	Screw	EZ-09-M4x10	
4-6	Screw	EZ-09-M3x8	
4-7	Mounting Base	TD-5250D-001	
4-8	Stud	ST-086	
4-9	Variable Resistor	VR-29-EVH-Y03R25B52	
4-10	Variable Resistor Supporter	TC-427-003	
4-11	Screw	EZ-09-M4x10	
4-12	Motor Supporter	TC-212-001	
4-13	Capstan Drive Motor	EM-710-007A	
4-14	Nut	EZ-09-M3	
4-15	Spring Washer	EZ-09-M3	
4-16	Radiator	TC-212-002	
4-17	Screw	EZ-09-M3x8	
4-18	Screw	EZ-09-M3x6	
4-19	Power Supply PCB Assembly	PA-377	
4-20	PCB Supporter	TC-427-004	
4-21	Fuse Holder	FS-89-F-3294	
4-22	Fuse	FS-19-2A	
4-23	Screw	EZ-09-M3x10	

www.hifiengine.com

EXPLODED VIEW 4

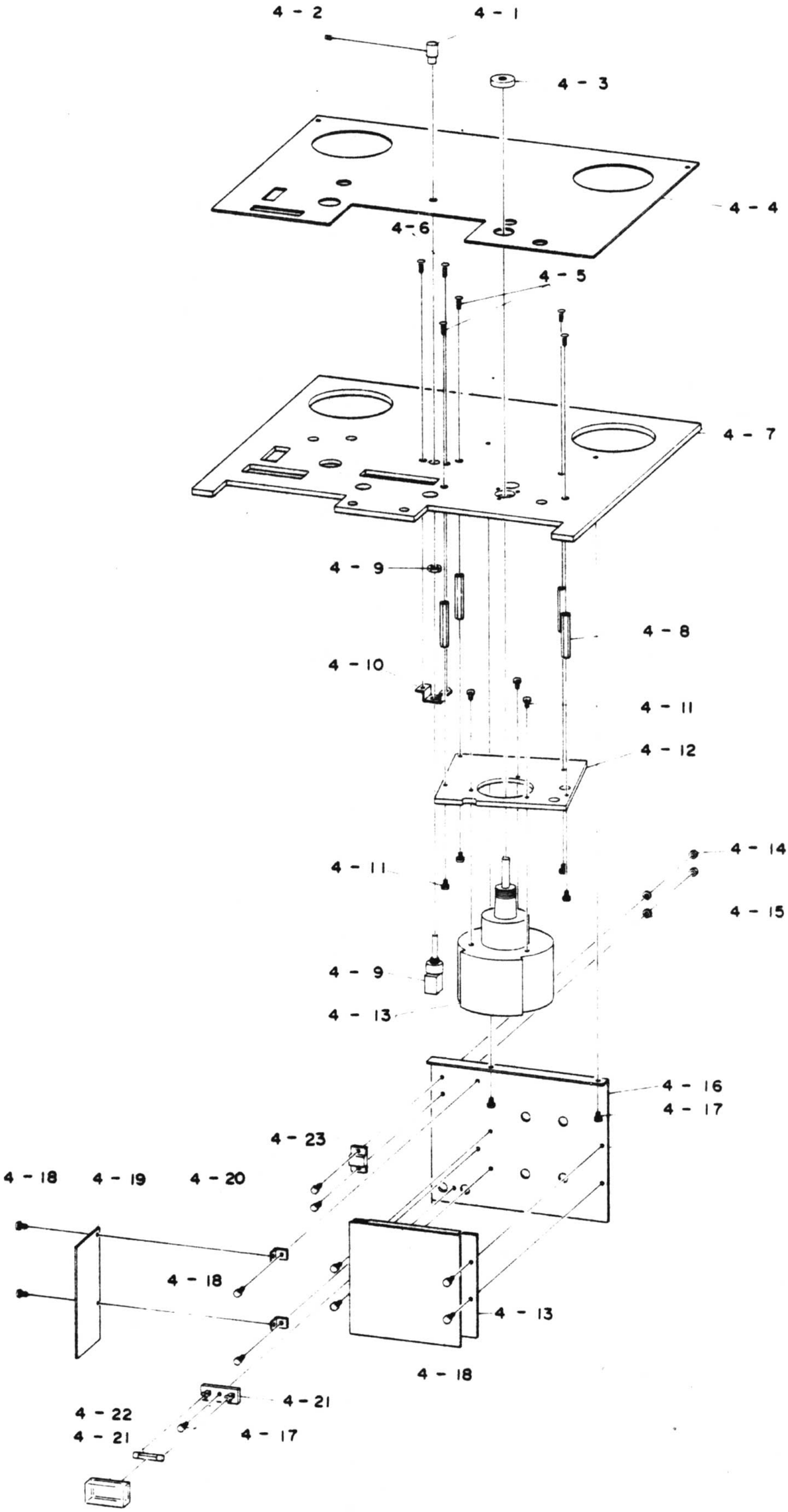

www.hifiengine.com

PARTS LIST 5 For Model 8SD or 1/2QXD and Difference of Model 2SD2 or QXD

Ref. No.	Description	Parts No.	Notes
5-1	Screw	EZ-09-M3x8	
5-2	Pinch Roller Cap	TP-419-002A	
5-3	Retaining Ring	EZ-09-RTW-19	
5-4	Bearing	BG-19-626ZZ	
5-5	Coller	TP-408-02	
5-6	Pinch Roller	TP-210-001	
5-7	Pinch Roller Shaft	TP-210-002	
5-8	Display Panel	TD-5250D-003	
5-9	Screw	EZ-09-M3x10	
5-10	Screw	EZ-09-M4x12	
5-11	Mounting Base	TD-5250D-001	
5-12	Spring Supportor	TY-900-019	
5-13	Screw	EZ-09-M3x6	
5-14	Spring	SG-100-048	
5-15	Pinch Roller Arm	TP-420-002	
5-16	Cap Screw	EZ-09-M4x10	
5-17	Arm Shaft	TP-420-001	
5-18	Retaining Ring	EZ-09-ETWJ-4	
5-19	Double Nut	EZ-09-M4	
5-20	Spring	SG-500-031	
5-21	Spherical Washer	TP-401-007	
5-22	Fiber Washer	EZ-09-M4	
5-23	Retaining Ring	EZ-09-ETWJ-3	
5-24	Adjusting Screw	TP-416-009	
5-25	Retaining Ring	EZ-09-ETWJ-2	
5-26	Solenoid Pin	TY-400-015	
5-27	Solenoid	SO-317 DC24V	
5-28	Stopper	TY-200-013	
5-29	Plain Washer	EZ-09-M3	
5-30	Screw	EZ-09-M3x6	

For Model QXD or 2SD2 (Difference)

5-31	Pinch Roller Cap	TP-416-001	
5-32	Set Screw	EZ-09-M3x8	
5-33	Thrust Washer	EZ-09-Ø6x0.25t	
5-34	Pinch Roller	TP-416-010	
5-35	Retaining Ring	EZ-09-ETWJ-4	
5-36	Pinch Roller Shaft	TP-416-002	

www.hifiengine.com

EXPLODED VIEW 5

For Model 8SD or 1/2QXD and Difference of Model 2SD2 or QXD

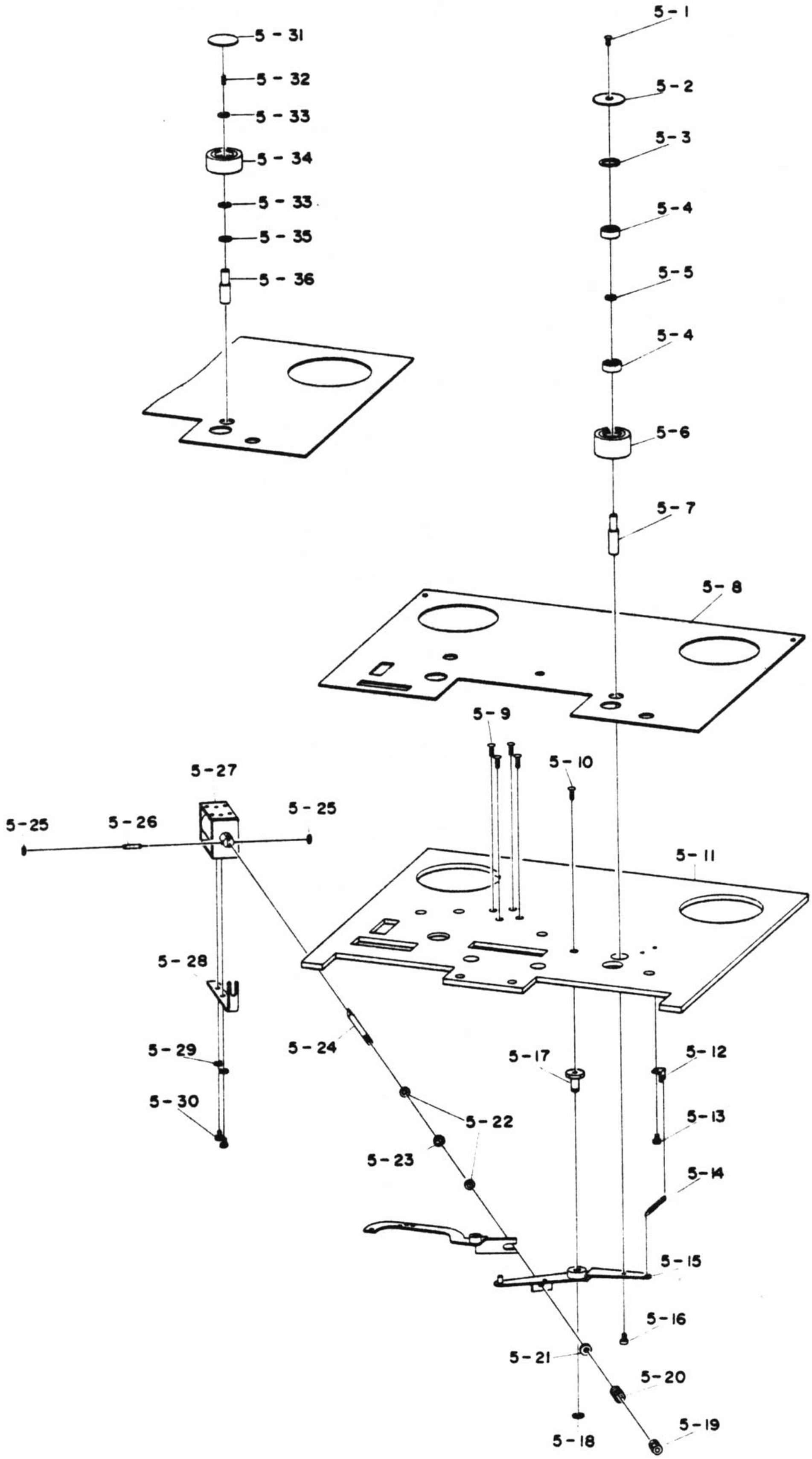

PARTS LIST 6-1 For Model 8SD

Ref. No.	Discription	Parts No.	Notes
6-1	Head Housing Assembly	TH-446-00B	
6-2	Screw	EZ-09-M3x8	
6-3	Screw	EZ-09-M2.6x6	
6-4	Connector	CN-09-MR-34M	
6-5	Connector	CN-09-MR-16M	
6-6	Screw	EZ-09-M3x8	
6-7	Connector Supporter	TH-212-006	
6-8	Screw	EZ-09-M4x6	
6-9	Screw	EZ-09-M3x6	
6-10	Connector	CN-09-MR-16F	
6-11	Connector	CN-09-MR-34F	
6-12	Erase Head Assembly	TH-212-00D	
6-13	Record Head Assembly	TH-212-00E	
6-14	Playback Head Assembly	TH-212-00F	
6-15	Tape Guide	TH-212-005	
6-16	Screw	EZ-09-M3x15	
6-17	Head Base	TH-212-002	
6-18	Screw	EZ-09-M3x8	
6-19	Display Panel	TD-5250D-003	
6-20	Mounting Base	TD-5250D-001	
6-21	Cord Clamper	EZ-01-001	
6-22	Screw	EZ-09-M3x6	
6-23	Cord Clamper	TY-200-006	
6-24	Spring Washer	EZ-09-M3	
6-25	Nut	EZ-09-M3	
6-26	Erase Head	SH-5308-21-001	
6-27	Head Supporter B	TH-212-004	
6-28	Screw	EZ-09-M2x5	
6-29	Shield Can	TH-212-001	
6-30-1	Record Head	SH-6308-21-001	
6-30-2	Reproduce Head	SH-7308-21-001	
6-31	Head Supporter A	TH-212-003	

EXPLODED VIEW 6-1 For Model 8SD

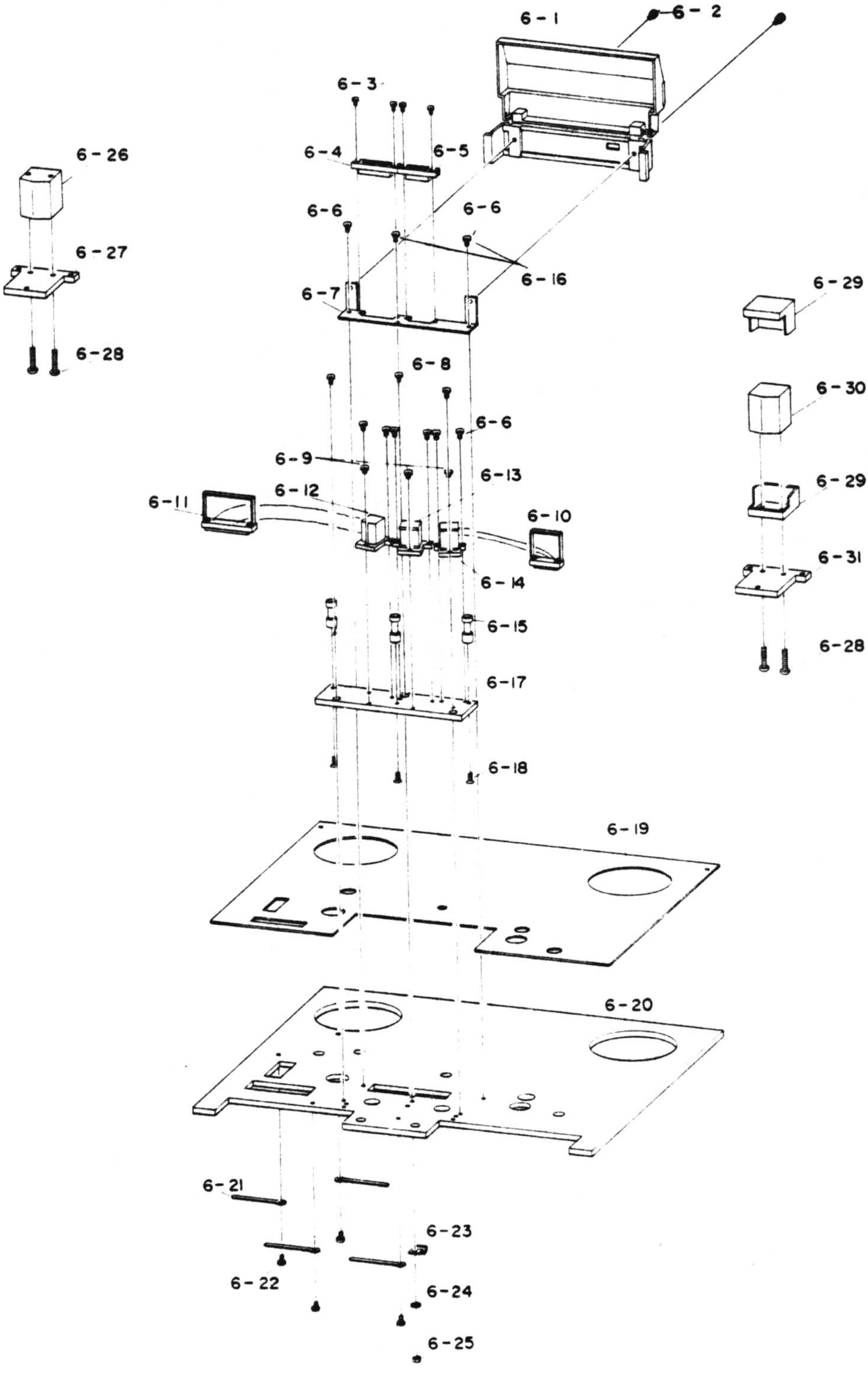

PARTS LIST 6-2 For Model 1/2QXD

Ref. No.	Description	Parts No.	Notes
6-1	Head Housing Assy	TH-446-00B	
6-2	Screw	EZ-09-M3x8	
6-3	Screw	EZ-09-M3x10	
6-4	Connector	CN-09-1150-028-009	
6-5	Screw	EZ-09-M3x6	
6-6	Connector Supporter	TH-213-008	
6-7	Screw	EZ-09-M4x6	
6-8	Screw	EZ-09-M3x8	
6-9	Screw	EZ-09-M3x6	
6-10	Erase Head Assy	TH-213-005	
6-11	Record Head Assy	TH-213-006	
6-12	Reproduce Head Assy	TH-213-007	
6-13	Tape Guide	TH-212-005	
6-14	Head Base	TH-213-001	
6-15	Screw	EZ-09-M3x8	
6-16	Display Panel	TD-5250D-003	
6-17	Mounting Base	TD-5250D-001	
6-18	Head P.C.B. Assy	PA-386	
6-19	Erase Head	SH-1304-21-001	
6-20	Head Supporter B	TH-213-003	
6-21	Screw	EZ-09-M2x5	
6-22	Shield Can	TH-213-004	
6-23	Record Head	SH-2304-21-001	
6-24	Reproduce Head	SH-3304-21-001	
6-25	Head supporter A	TH-213-002	

www.hifiengine.com

EXPLODED VIEW 6-2 For Model 1/2QXD

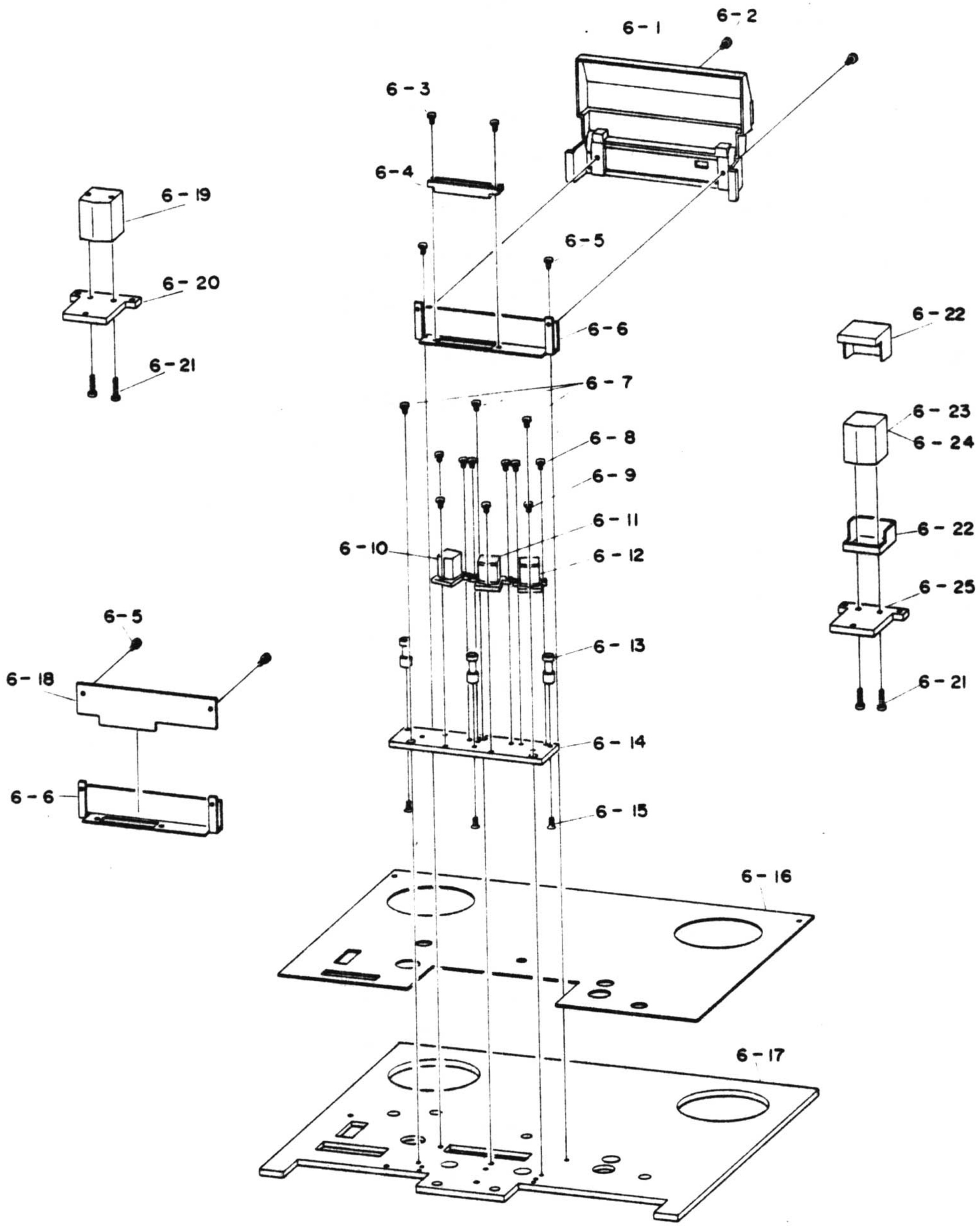

PARTS LIST 6-3 For Model QXD

Ref. No.	Description	Parts No.	Notes
6-1	Screw	EZ-09-M3x6	
6-2	Screw	EZ-09-M3x8	
6-3	Plain Washer	EZ-09-M3	
6-4	Head P.C.B. Assy	PA-386	
6-5	Screw	EZ-09-M3x4	
6-6	Plain Washer	EZ-09-M3	
6-7	Protector Sheet	TH-438-009	
6-8	Head Base	TH-446-001	
6-9	Head Housing Assy	TH-446-00B	
6-10	Tape Guide	TH-438-004	
6-11	Screw	EZ-09-M3x6	
6-12	Screw	EZ-09-M3x10	
6-13	Connector	CN-09-1150-028-009	
6-14	Housing Base	TH-455-001	
6-15	Display Panel	TD-5250D-003	
6-16	Mounting Base	TD-5250D-001	
6-17	Screw	EZ-09-M3x15	
6-18	Cord Clamper	EZ-01-001	
6-19	Screw	EZ-09-M3x10	
6-20	Screw	EZ-09-M3x12	
6-21	Head Adjusting Spring	SG-500-040	
6-22	Head Adjusting Spring	SG-500-063	
6-23	Screw	EZ-09-M2x5	
6-24	Spring Washer	EZ-09-M2	
6-25	Screw	EZ-09-M2x4	
6-26	Plain Washer	EZ-09-M2	
6-27	Head Supporter C	TH-450-001	
6-28	Head Supporter B	TH-442-002	
6-29	Head Supporter D	TH-450-003	
6-30	Spacer	TH-450-005	
6-31	Shield Can	TH-450-004	
6-32	Reproduce Head	SH-7204-11-004	
6-33	Record Head	SH-6204-11-004	
6-34	Erase Head	SH-5204-11-001	

www.hifiengine.com

EXPLODED VIEW 6-3 For Model QXD

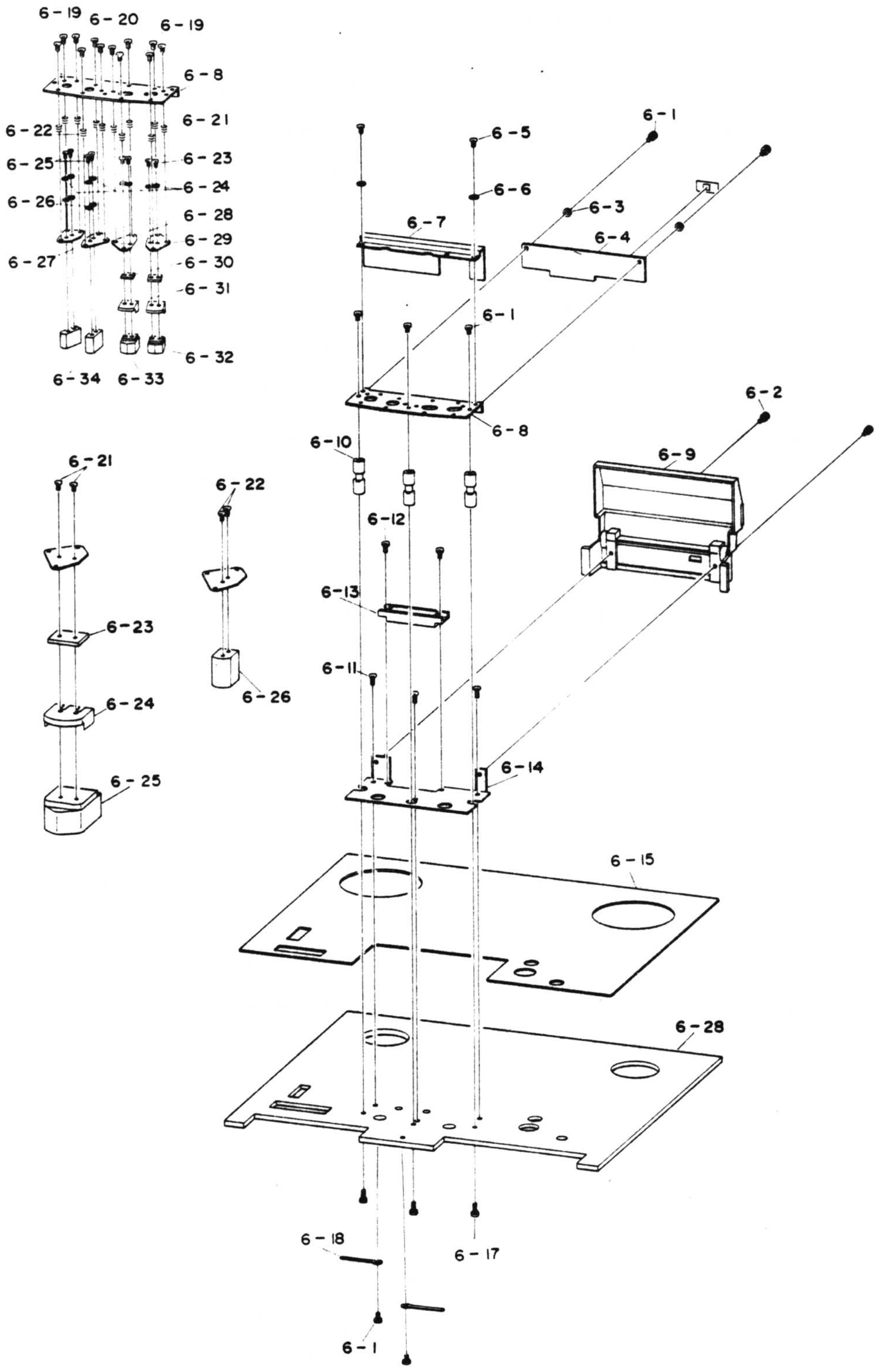

PARTS LIST 6-4 For Model 2SD2

Ref. No.	Description	Parts No.	Notes
6-1	Screw	EZ-09-M3x6	
6-2	Blind	TY-900-029	
6-3	Plain Washer	EZ-09-M3	
6-4	Head P.C.B. Assy	PA-387	
6-5	Screw	EZ-09-M3x4	
6-6	Screw	EZ-09-M3x8	
6-7	Protector Sheet	TH-438-009	
6-8	Head Base	TH-446-001	
6-9	Head Housing Assy	TH-446-00B	
6-10	Tape Guide	TH-438-004	
6-11	Screw	EZ-09-M3x6	
6-12	Screw	EZ-09-M3x10	
6-13	Connector	CN-09-1150-028-009	
6-14	Housing Base	TH-455-001	
6-15	Display Panel	TD-5250D-003	
6-16	Mounting Base	TD-5250D-001	
6-17	Cord Clamper	EZ-01-001	
6-18	Screw	EZ-09-M3x15	
6-19	Screw	EZ-09-M3x10	
6-20	Screw	EZ-09-M3x12	
6-21	Head Adjusting Spring	SG-500-040	
6-22	Head Adjusting Spring	SG-500-063	
6-23	Screw	EZ-09-M2x5	
6-24	Screw	EZ-09-M2x4	
6-25	Spring Washer	EZ-09-M2	
6-26	Plain Washer	EZ-09-M2	
6-27	Head Supporter D	TH-450-003	
6-28	Head Supporter B	TH-422-002	
6-29	Head Supporter A	TH-422-001	
6-30	Spacer	TH-450-005	
6-31	Shield Can	TH-450-004	
6-32	Reproduce Head	SH-7202-11-001	
6-33	Record Head	SH-6202-11-001	
6-34	Reproduce Head	SH-7204-11-001	
6-35	Erase Head	SH-5202-11-001	

www.hifiengine.com

EXPLODED VIEW 6-4 For Model 2SD2

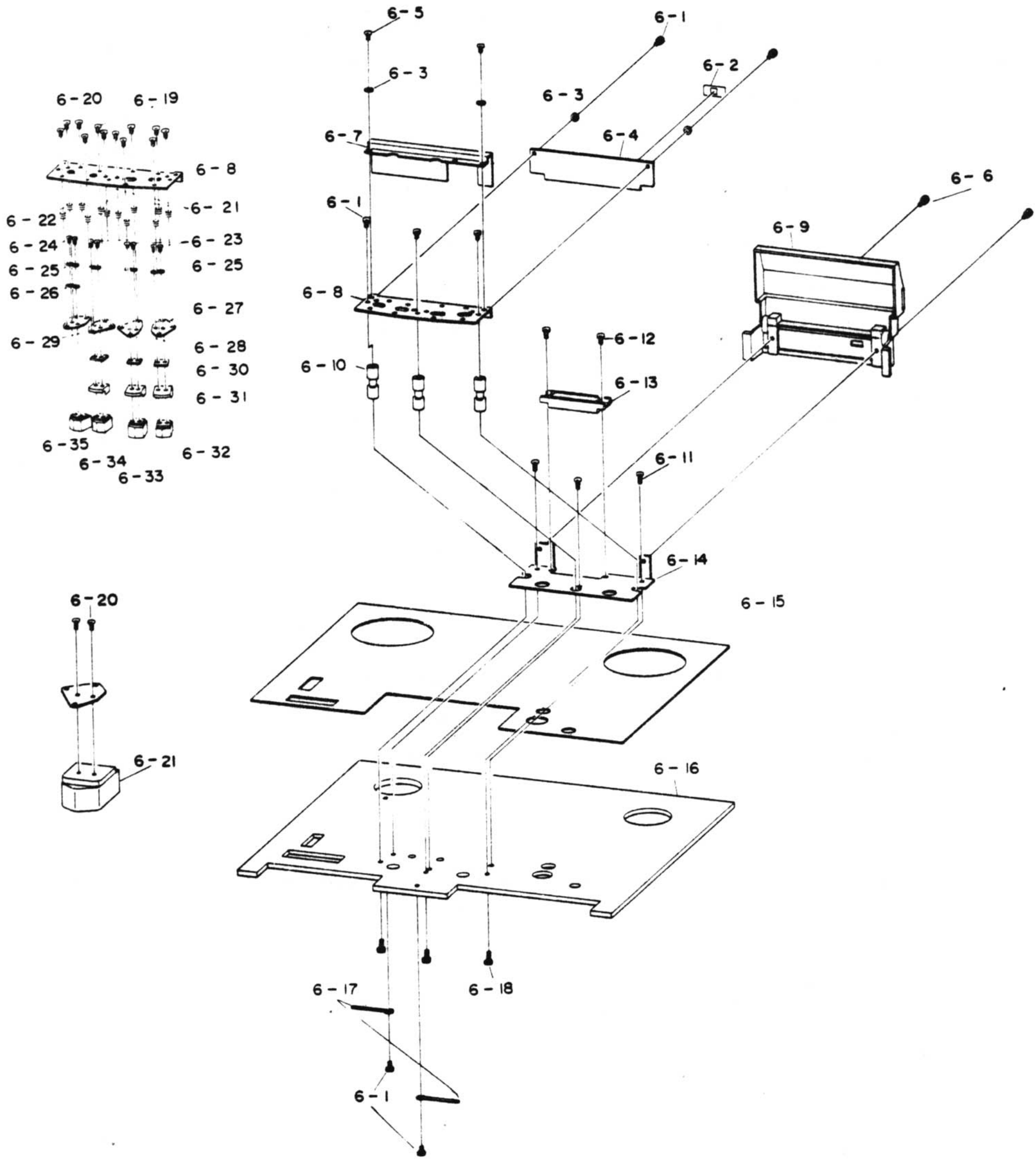

PARTS LIST 7

Ref. No.	Discription	Parts No.	Notes
7-1	Cue Lever	TR-416-001	
7-2	Display Panel	TD-5250D-003	
7-3	Screw	EZ-09-M4x12	
7-4	Screw	EZ-09-M3x10	
7-5	Mounting Base	TD-5250D-001	
7-6	Arm Shaft	TP-420-001	
7-7	Arm Shaft	TR-413-002	
7-8	Shifter Arm A	TR-413-003	
7-9	Shifter Arm B	TR-413-007	
7-10	Retaining Ring	EZ-09-ETWJ-3	
7-11	Spring	SG-100-050	
7-12	Arm Shaft	TR-414-003	
7-13	Pinch Roller Arm	TP-420-002	
7-14	Retaining Ring	EZ-09-ETW-4	
7-15	Fook	TR-419-003	
7-16	Screw	EZ-09-M3x6	
7-17	Blind	TY-900-053	
7-18	Cue Arm Stopper	TY-200-071	
7-19	Cue Lock Arm	TR-419-004	
7-20	Plain Washer	EZ-09-M3	
7-21	Cap Screw	EZ-09-M3x8	
7-22	Cue Arm	TR-419-001	

www.hifiengine.com

EXPLODED VIEW 7

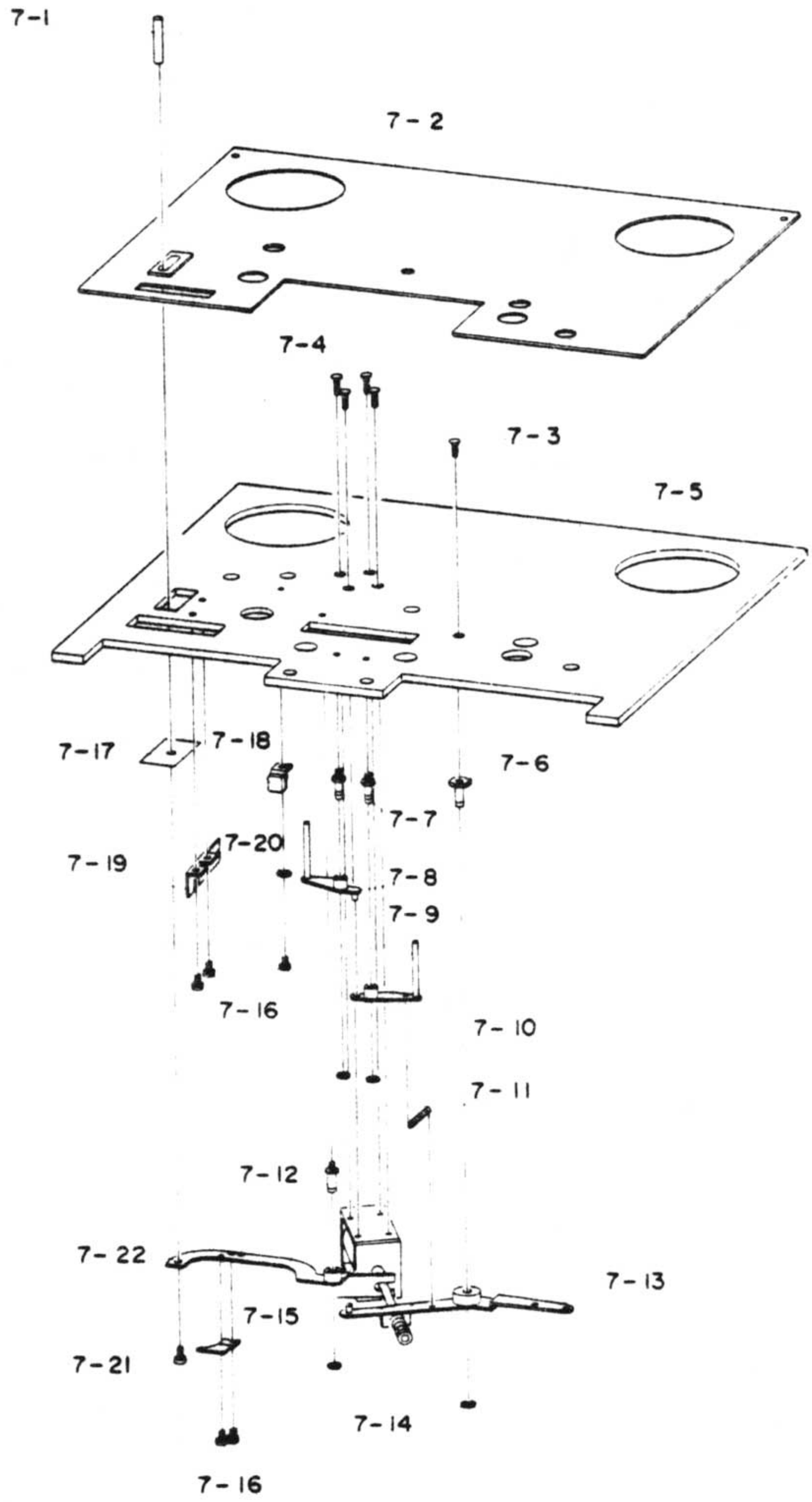

PARTS LIST 8 For Model 8SD or 1/2QXD and Difference of Model 2SD2 or QXD

Ref. No.	Description	Parts No.	Notes
8-1	Guide Roller	TG-213-001	
8-2	Bearing	BG-19-606ZZ	
8-3	Roller Holder	TG-425-002	
8-4	Screw	EZ-09-M3x35	
8-5	Guide Pole	TD-5450-007	
8-6	Display Panel	TD-5250D-003	
8-7	Mounting Base	TD-5250D-001	
8-8	Holder Nut	TG-425-004	
8-9	Set Screw	EZ-09-M3x4	
8-10	Roller Pulley	TG-425-003	
8-11	Belt	TB-5045-12	
8-12	Counter	CT-19-MP-499-01SPEC	
8-13	Counter Supporter	TZ-126-001	
8-14	Screw	EZ-09-M3x6	

For Model 2SD2 or QXD (Difference)

8-15	Roller Cap	TG-424-01	
8-16	Thrust Washer	EZ-09-Ø8x0.25t	
8-17	Roller Shaft	TG-424-02	
8-18	Sleeve	TG-424-03	
8-19	Roller	TG-424-04	
8-20	Roller Base	TG-424-05	

www.hifiengine.com

EXPLODED VIEW 8

For Model 8SD or 1/2QXD and Difference of Model 2SD2 or QXD

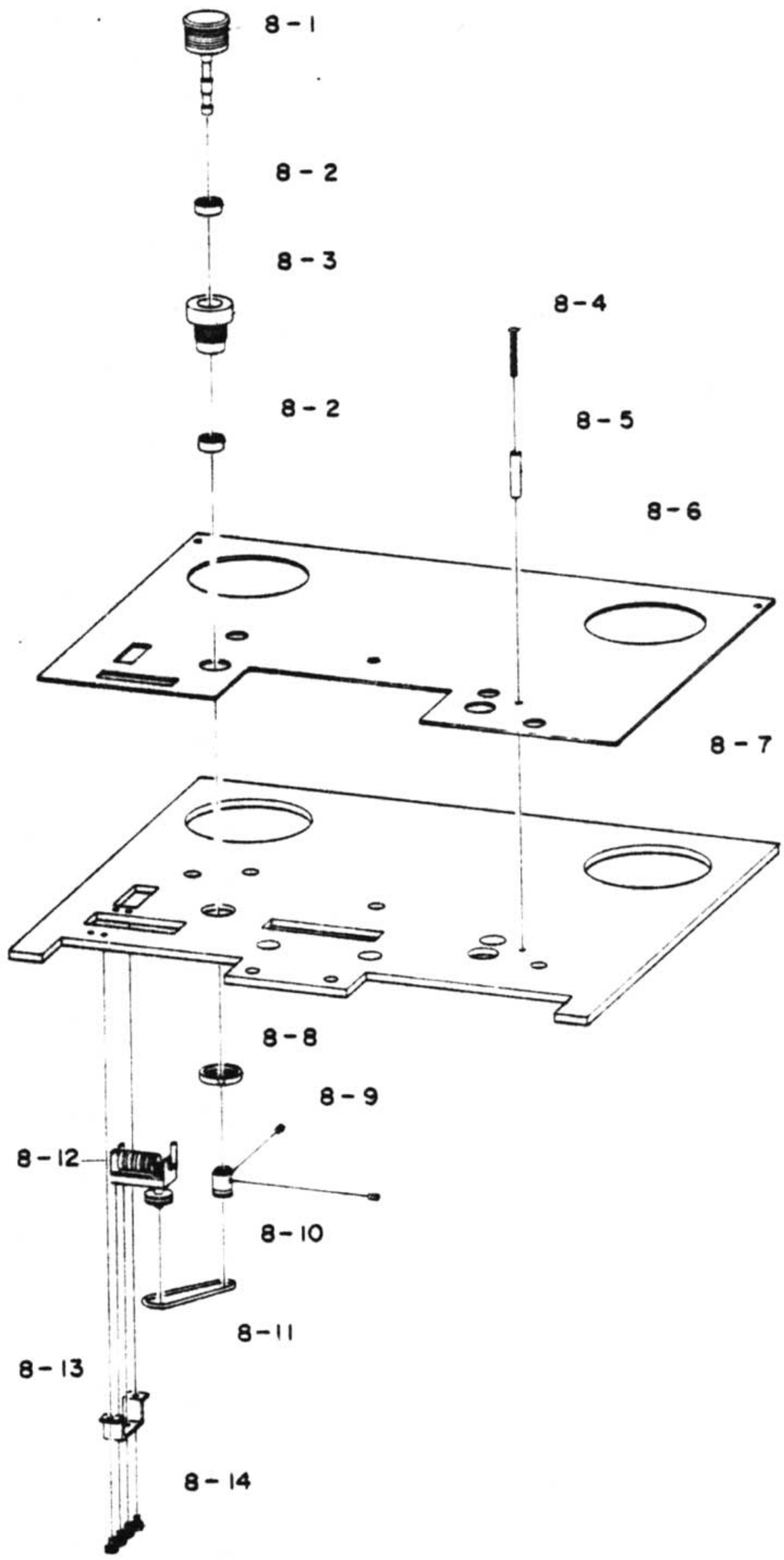

Difference of Model 2SD2 or QXD

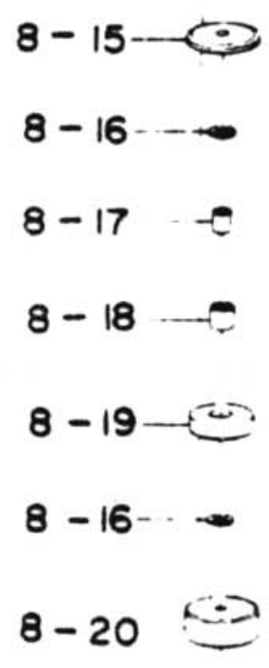

PARTS LIST 9

Ref. No.	Description	Parts No.	Notes
9-1	Display Screw	TA-420-005	
9-2	Screw	EZ-09-M2x4	
9-3	Tape Guide For 8SD or ½QXD:TA-211-001, For QXD or 2SD2:TA-420-004		
9-4	Tention Arm	TA-420-003	
9-5	Screw	EZ-09-M3x5	
9-6	Arm Shaft	TA-429-001	
9-7	Slide Washer	EZ-09-5dx0.5t	
9-8	Arm Holder	TA-420-002	
9-9	Display Panel	TD-5250D-003	
9-10	Mounting Base	TD-5250D-001	
9-11	Micro Switch	SW-59-LV-3H-1A	
9-12	Screw	EZ-09-M3x25	
9-13	Magnetic Supporter	TY-900-023	
9-14	Screw	EZ-09-M3x6	
9-15	Stopper	TD-5451-006	
9-16	Spring Supporter	TY-900-020	
9-17	Nut	TA-420-007	
9-18	Spring Holder	TA-427-001	
9-19	Set Screw	EZ-09-M3x6	
9-20	Plain Washer	EZ-09-M3	
9-21	Spring	SG-100-047B	
9-22	Switch Actuator	TA-423-002	
9-23	Screw	EZ-09-M3x4	
9-24	Screw	EZ-09-M3x6	
9-25	Spring Holder	TA-429-002	
9-26	Spring For 8SD or ½QXD:SG-100-069, For QXD or 2SD2:SG-100-046		
9-27	Stopper Arm	TA-420-010	

www.hifiengine.com

EXPLODED VIEW 9

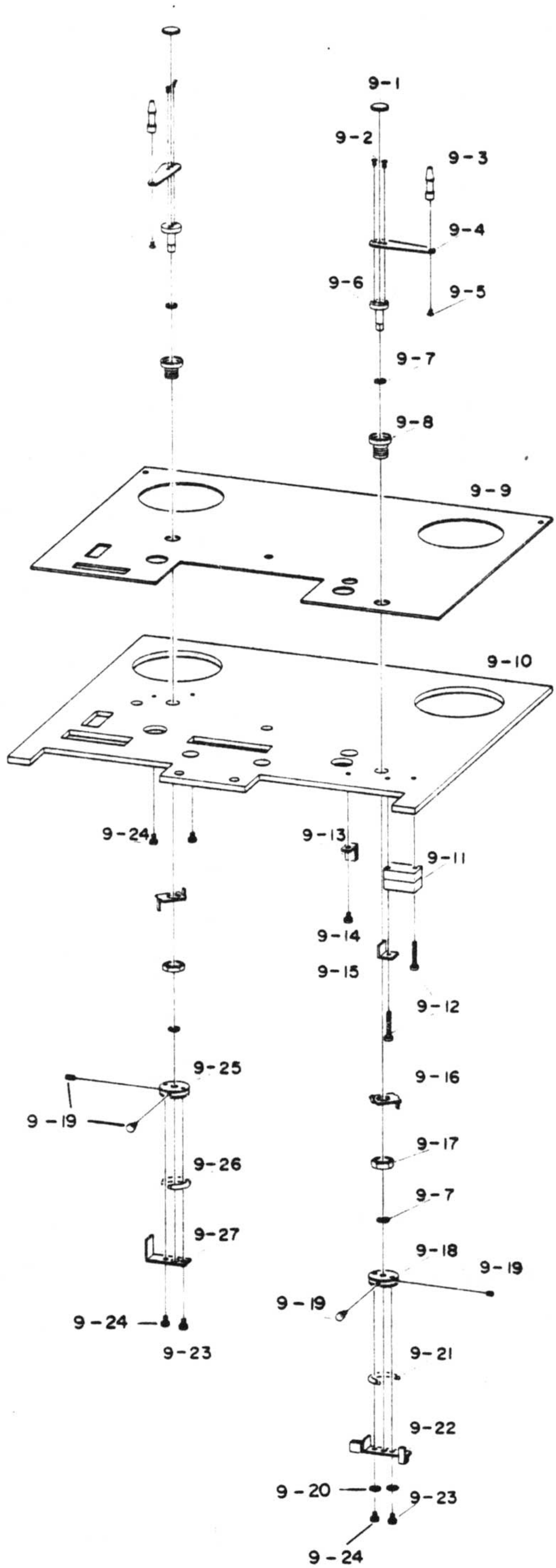

PARTS LIST 10

Ref. No.	Description	Parts No.	Notes
10-1	Push Button A	CR-824-001A	
10-2	Push Button C	CR-824-001C	
10-3	Push Button B	CR-824-001B	
10-4	Push Button E	CR-824-001E	
10-5	Push Button C	CR-823-001C	
10-6	Push Button B	CR-823-001B	
10-7	Push Button	CR-823-002D	
10-8	Push Button	CR-823-001A	
10-9	Push Button	CR-823-001A	
10-10	Display Panel	TD-5250D-005	
10-11	Display Panel	TD-5250D-003	
10-12	Mounting Base	TD-5250D-001	
10-13	Lamp Supporter	TY-900-025	
10-14	Screw	EZ-09-M3x6	
10-15	Lamp Assembly	PL-19-005	
10-16	Screw	EZ-09-M2.6x5	
10-17	Guide	CR-823-010	
10-18	Switch Base	CR-823-008	
10-19	Screw	EZ-09-M3x10	
10-20	Micro Switch	SW-59-V-1A	
10-21	Guide	CR-824-006	
10-22	Screw	EZ-09-M3x6	
10-23	Switch Base	CR-824-005	
10-24	Power Switch PCB Assembly	PA-378	
10-25	Switch Supporter L	CR-824-007L	
10-26	Switch Supporter R	CR-824-007R	
10-27	Micro Switch	SW-59-SS5GL	
10-28	Screw	EZ-09-M2x10	
10-29	Switch Supporter	CR-824-008	
10-30	Screw	EZ-09-M2.6x5	
10-31	Screw	EZ-09-M2x12	

www.hifiengine.com

EXPLODED VIEW 10

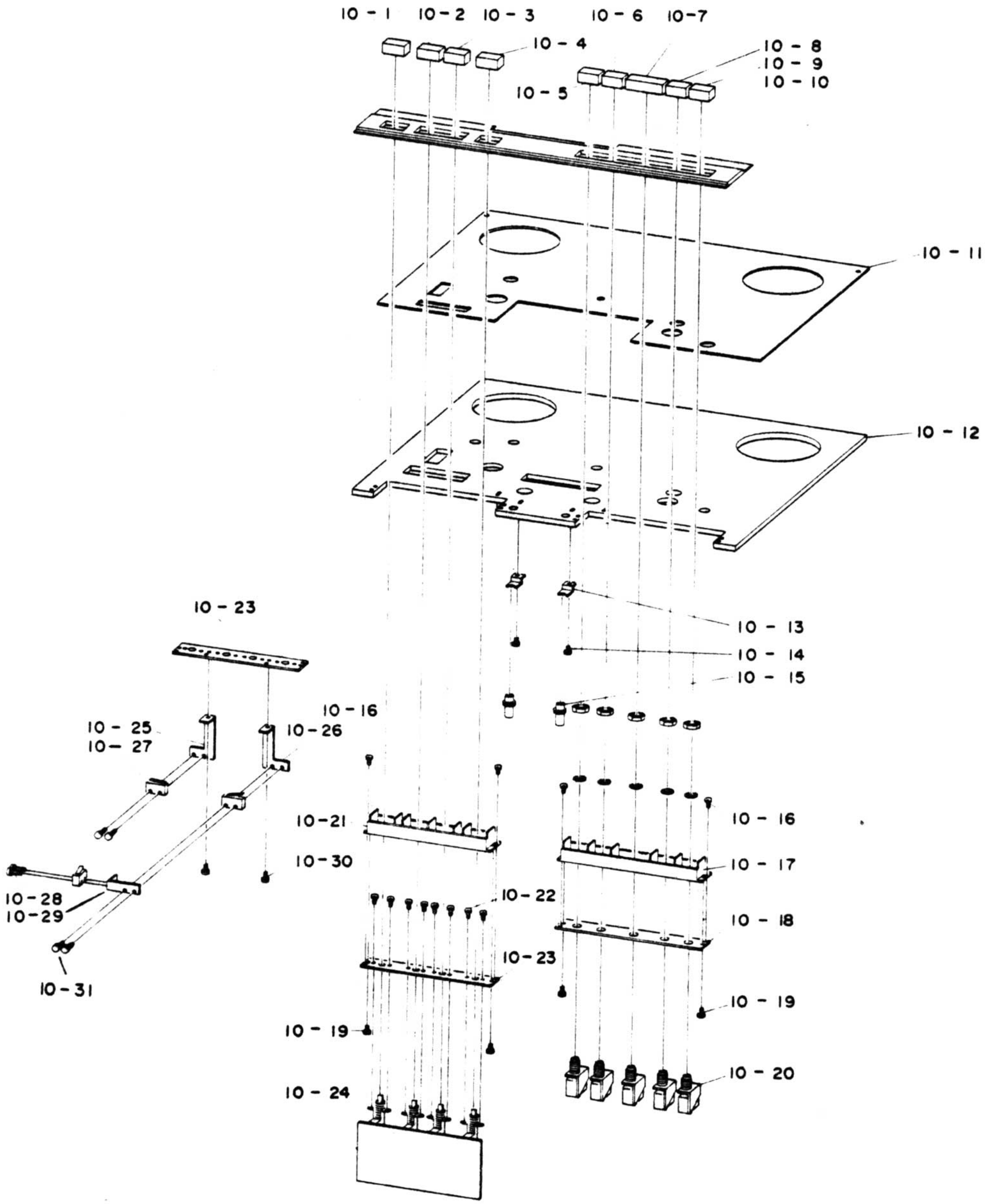

PARTS LIST 11-1 For Model 8SD

Ref. No.	Description	Parts No.	Notes
11-1	Screw	EZ-09-M2x6	
11-2	Caution Label	NP-300-004	
11-3	Screw	EZ-09-M3x8	
11-4	Connector	CN-09-SRC02A16-10S	
11-5	Screw	EZ-09-M3x8	
11-6	Connector	CN-09-16-R4M	
11-7	Screw	EZ-09-M3x6	
11-8	Fuse Hollder	FS-89-S-N2052	
11-9	Fuse	FS-19-2A	
11-10	Earth Terminal	LP-09-T-10	
11-11	Transistor	SC-09-2SD-325E	
11-12	Power Supply IC	IC-09-7805UC	
11-13	Screw	EZ-09-M3x12	
11-14	Spring Washer	EZ-09-M3	
11-15	Sub-Power Supply PCB Assembly	PA-307	
11-16	Nut	EZ-09-M3	
11-17	Connector Panel	TD-5250D-007	
11-18	IC	IC-09-SI-3250E	
11-19	Mother Board Assembly	PA-314	
11-20	Master OSC Power Supply Assembly	PA-315	
11-21	Control PCB Assembly	PA-316	
11-22	Screw	EZ-09-M3x6	
11-23	Control PCB Assembly		
11-24	PCB Stopper	PA-314-001	
11-25	Cord Stopper	RB-19-BU-3270	
11-26	Power Cord	TY-556	
11-27	Stopper Spacer	TD-5250-005	
11-28	Plain Washer	EZ-09-M3	

www.hifiengine.com

EXPLODED VIEW 11-1 For Model 8SD

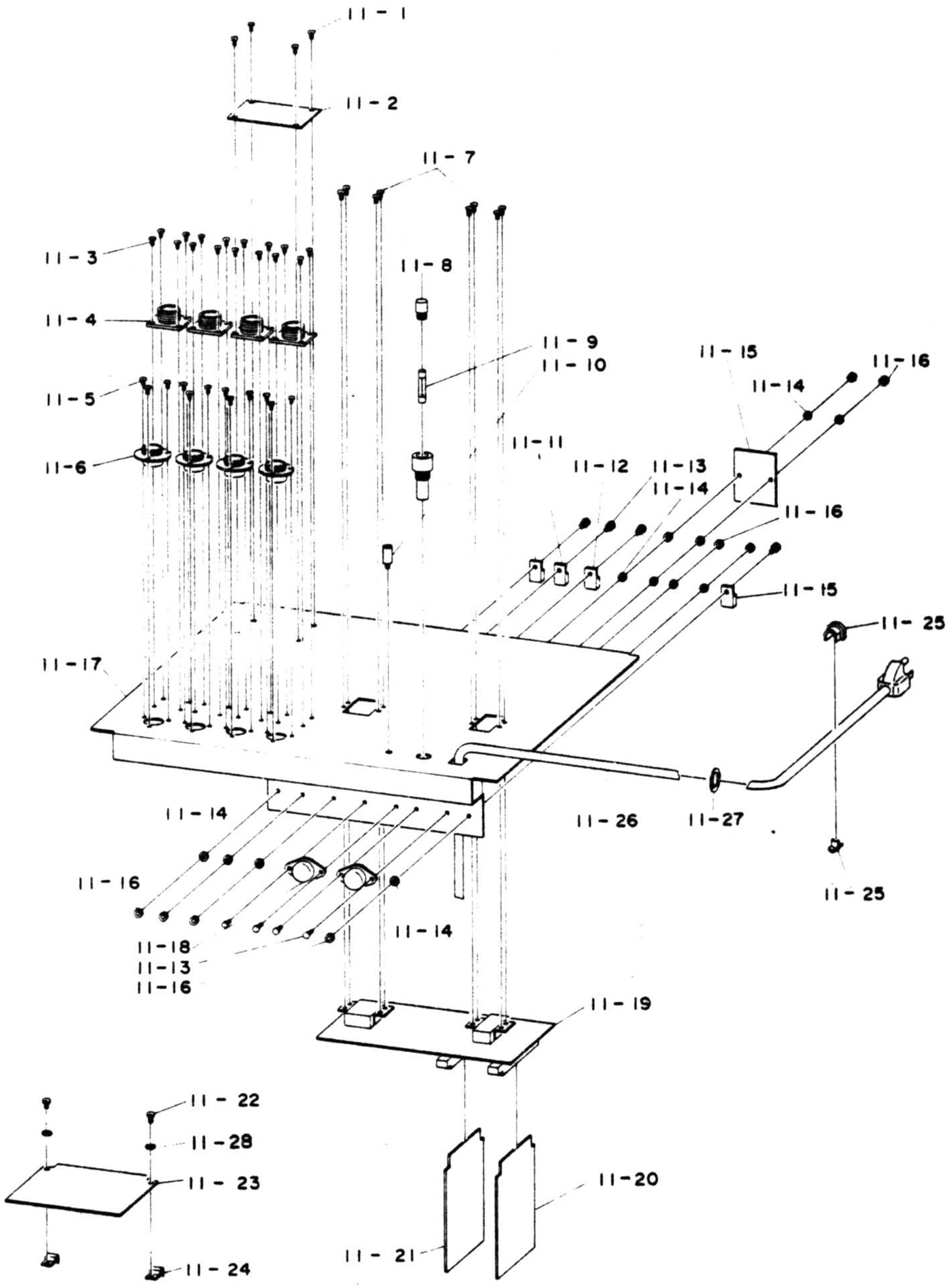

PARTS LIST 11-2 For Model 2SD2 and Difference of Model QXD or 1/2 QXD

Ref. No.	Description	Parts No.	Notes
11-1	Screw	EZ-09-M2x6	
11-2	Caution Label	NP-300-004	
11-3	Screw	EZ-09-M3x8	
11-4	Connector	CN-09-SRC02A16-10S	
11-5	Screw	EZ-09-M3x8	
11-6	Connector	CN-09-16-R4M	
11-7	Screw	EZ-09-M3x6	
11-8	Fuse Holder	FS-89-S-N2052	
11-9	Fuse	FS-19-2A	
11-10	Earth Terminal	LP-09-T-10	
11-11	Transistor	SC-09-2SD325E	
11-12	Power Supply IC	IC-09-7805UC	
11-13	Screw	EZ-09-M3x12	
11-14	Spring Washer	EZ-09-M3	
11-16	Nut	EZ-09-M3	
11-17	Connector Panel	MX-5050-2SD2-001	
11-18	IC	IC-09-SI-3250E	
11-19	Mother Board Assy	PA-314	
11-20	M.OSC Power Assy	PA-315	
11-21	Control PCB Assy	PA-316	
11-22	Screw	EZ-09-M3x6	
11-23	Control PCB Assy		
11-24	PCB Stopper	PA-314-001	
11-25	Cord Stopper	RB-19-BU-3270	
11-26	Power Cord	TY-556	
11-27	Stopper Spacer	TD-5250-005	
11-28	Plain Washer	EZ-09-M3	

For Model QXD or 1/2QXD (Difference)

11-3	Screw	EZ-09-M3x8	
11-4	Connector	CN-09-M3x8	
11-5	Screw	EZ-09-M3x8	
11-6	Connector	CN-09-16-R4M	
11-29	Connector Panel	TD-5054D-001	

www.hifiengine.com

EXPLODED VIEW 11-2

For Model 2SD2 and Difference of Model QXD or 1/2QXD

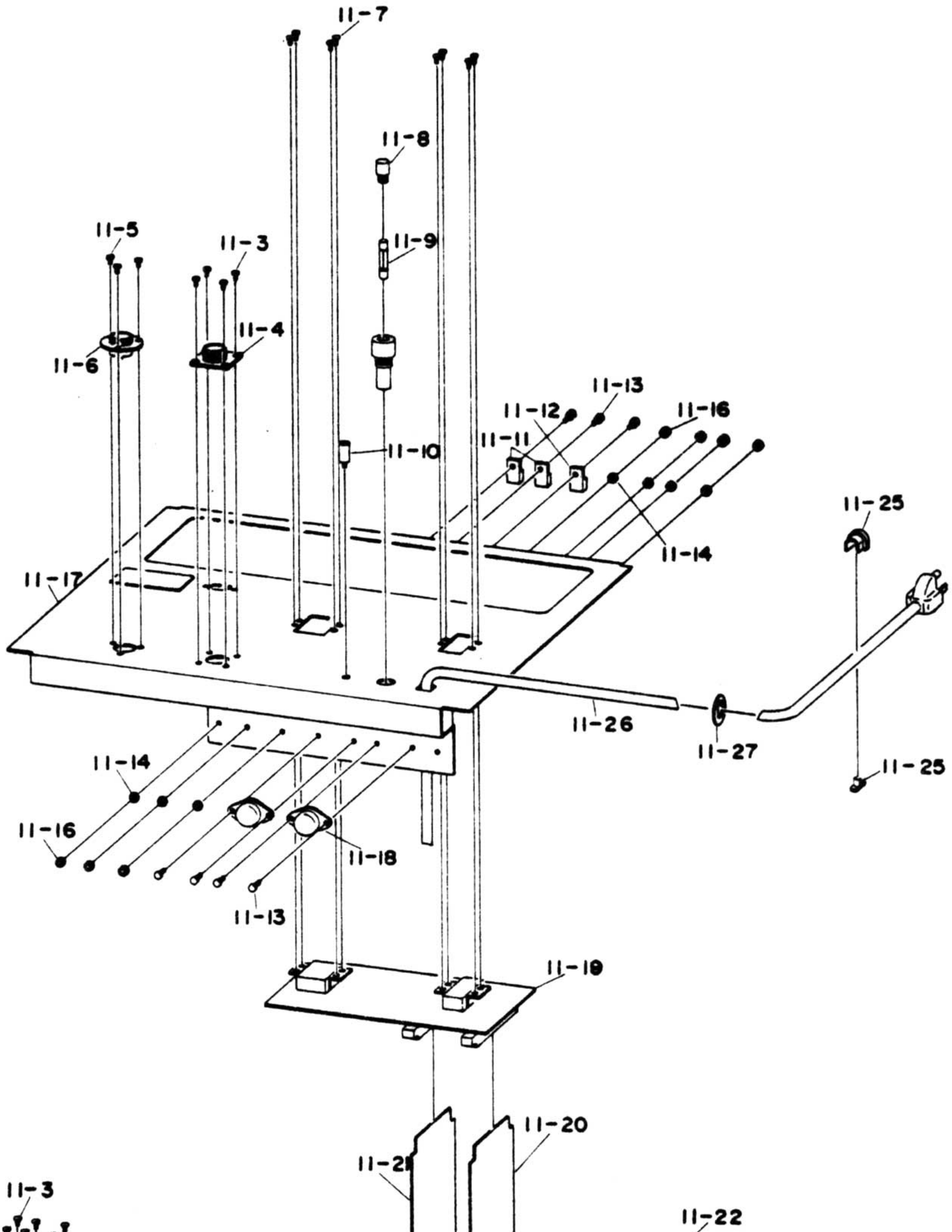

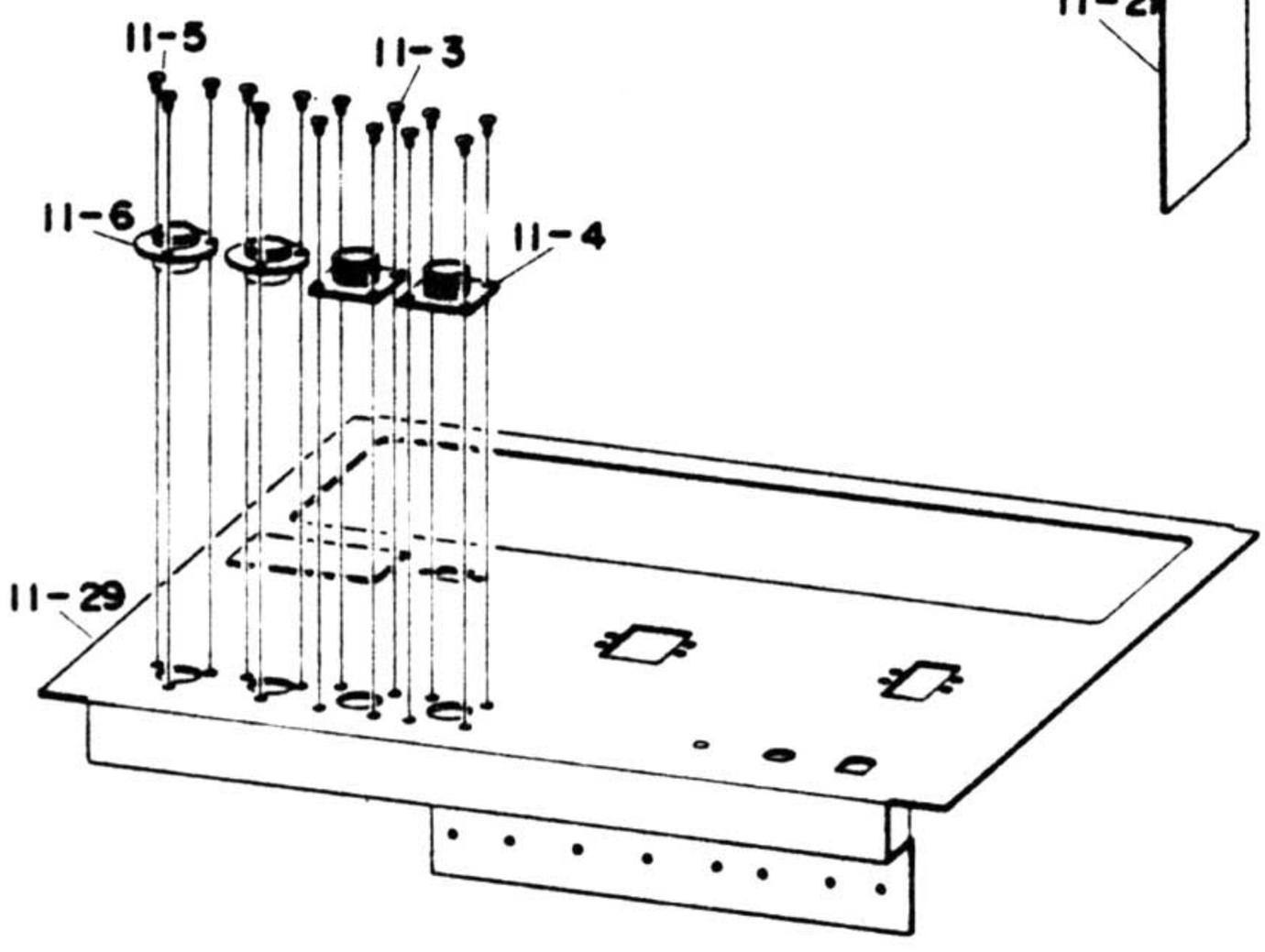

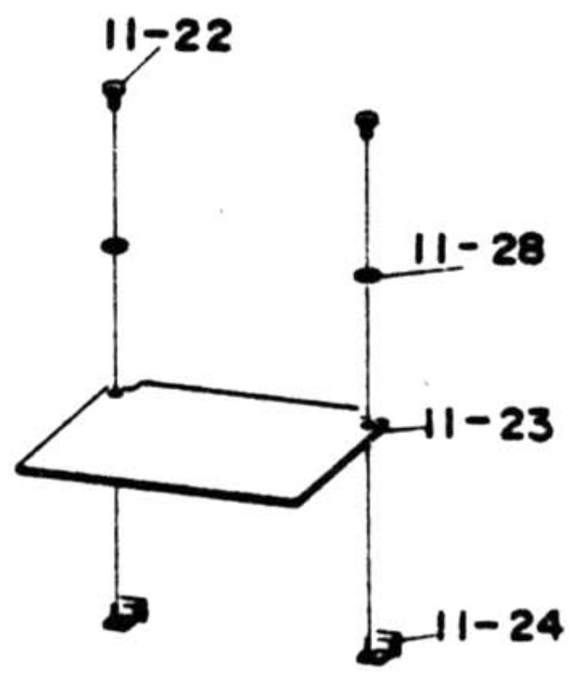

PARTS LIST 12-1 For Model 8SD

Ref. No.	Description	Parts No.	Notes
12-1	Knob	NB-31-035	
12-2	Set Screw	EZ-09-M3x5	
12-3	Spacer	TY-100-031	
12-4	Knob	NB-31-036	
12-5	Spacer	TY-100-042	
12-6	Screw	EZ-09-M3x8	
12-7	Display Washer	TY-800-021	
12-8	Sheet	TY-800-017	
12-9	AMPL Display Panel	AF-237-002	

www.hifiengine.com

EXPLODED VIEW 12-1 For Model 8SD

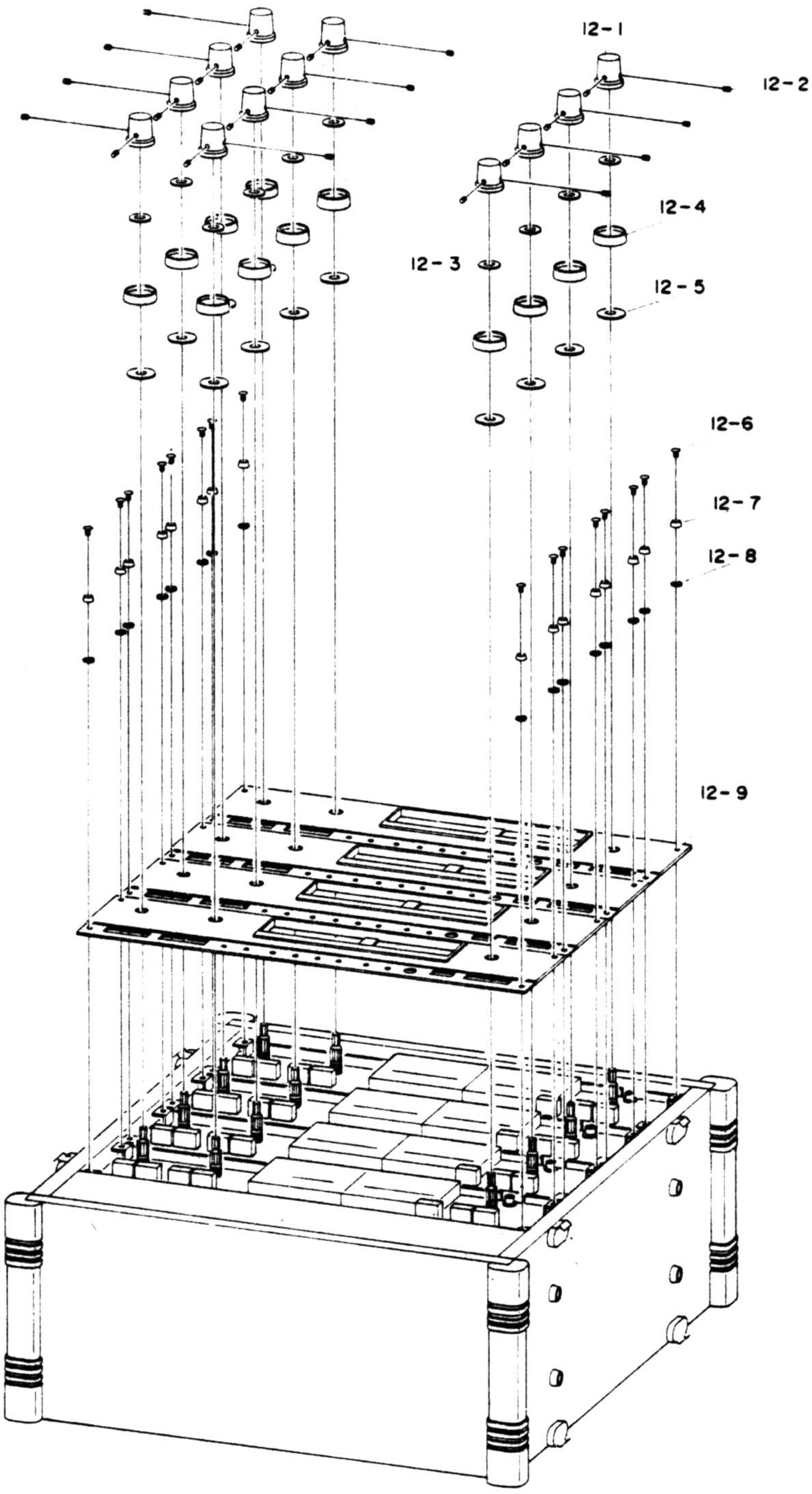

www.hifiengine.com

PARTS LIST 12-2 For Model QXD or 1/2QXD

Ref. No.	Description	Parts No.	Notes
12-1	Knob	NB-31-035	
12-2	Set Screw	EZ-09-M3x5	
12-3	Spacer	TY-100-031	
12-4	Knob	NB-31-036	
12-5	Spacer	TY-100-042	
12-6	Screw	EZ-09-M3x8	
12-7	Display Washer	TY-800-021	
12-8	Sheet	TY-800-017	
12-9	ANPL Display Panel	AF-237-002	

www.hifiengine.com

EXPLODED VIEW 12-2 For Model QXD or 1/2QXD

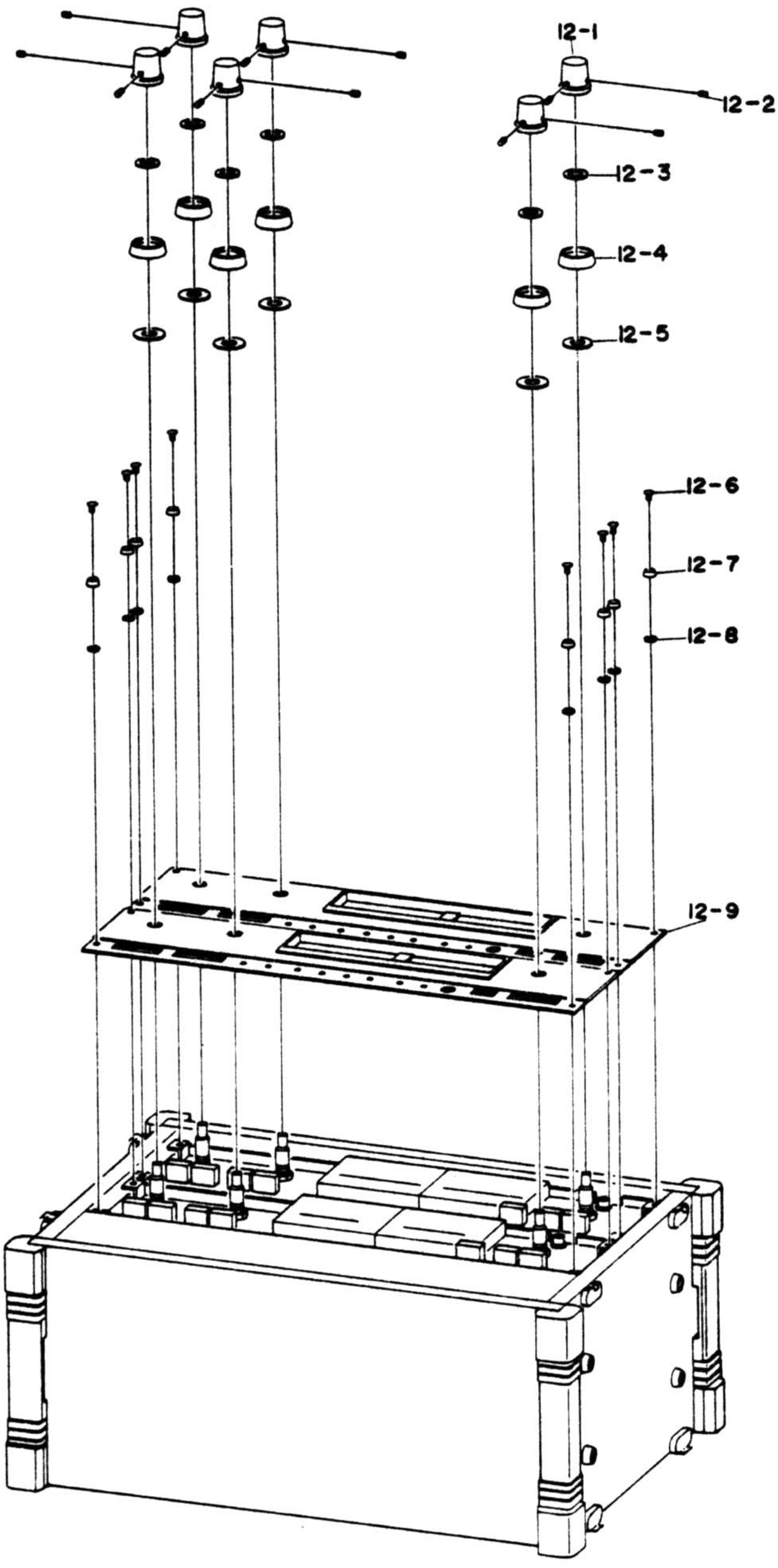

PARTS LIST 12-3 For Model 2SD2

Ref. No.	Description	Parts No.	Notes
12-1	Knob	NB-31-035	
12-2	Set Screw	EZ-09-M3x5	
12-3	Spacer	TY-100-031	
12-4	Knob	NB-31-036	
12-5	Spacer	TY-100-042	
12-6	Screw	EZ-09-M3x8	
12-7	Display Washer	TY-800-021	
12-8	Sheet	TY-800-017	
12-9	AMPL Display Panel	AF-237-002	

www.hifiengine.com

EXPLODED VIEW 12-3 For Model 2SD2

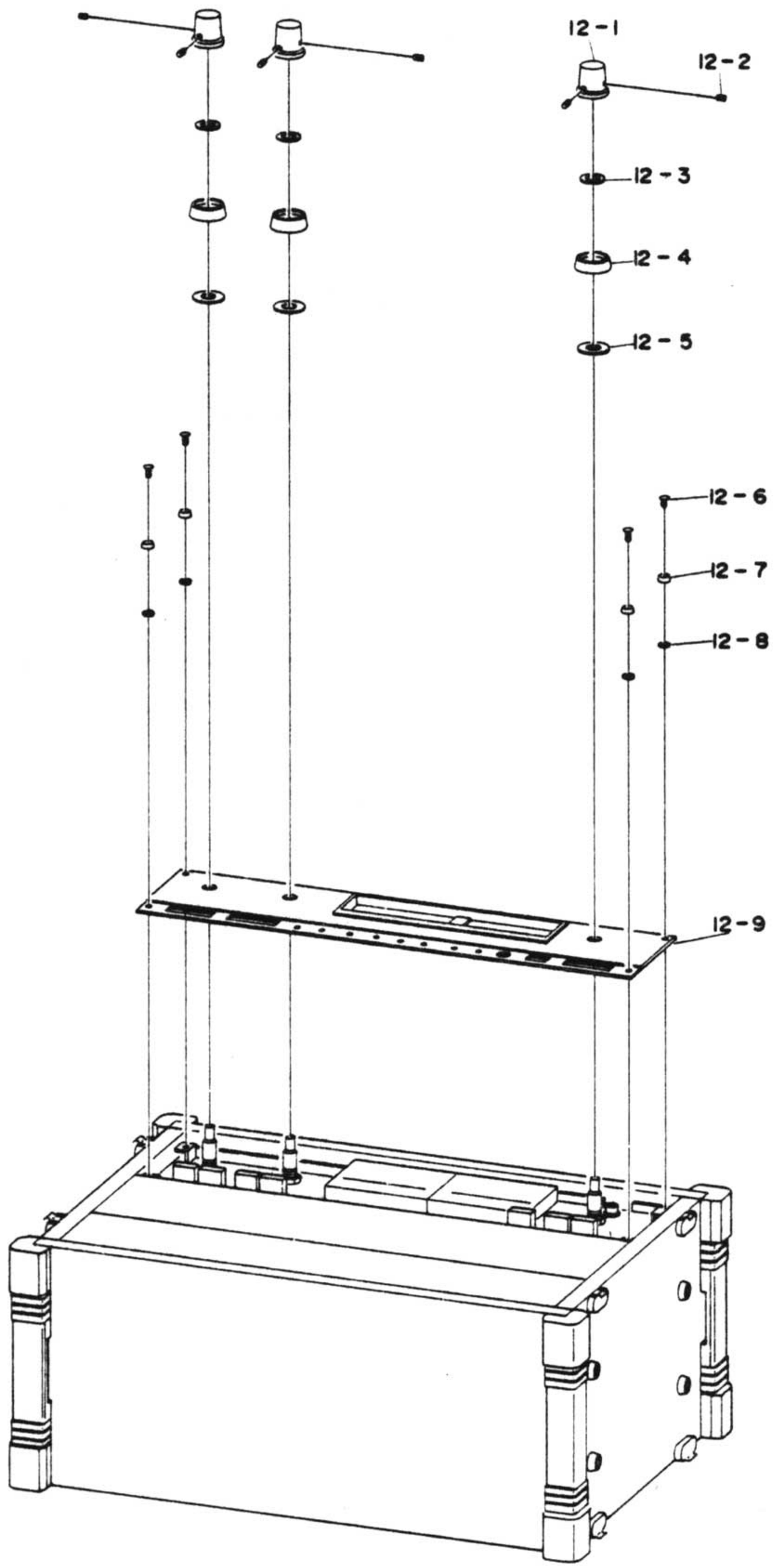

www.hifiengine.com

PARTS LIST 13-1 For Model 8SD

Ref. No.	Description	Parts No.	Notes
13-1	Wood Screw	EZ-09-M3.5x20	
13-2	Protector	CS-264-005	
13-3	Screw	EZ-09-M3x25	
13-4	Display Washer	TY-800-021	
13-5	Sheet	TY-800-017	
13-6	Case Top Board	CS-261-004	
13-7	Case Side Board	CS-264-004	
13-8	Display Washer	TY-800-014	
13-9	Latch	CA-39-C-15	
13-10	Wood Screw	EZ-09-M3.1x16	
13-11	Cap Screw	EZ-09-M4x25	

www.hifiengine.com

EXPLODED VIEW 13-1 For Model 8SD

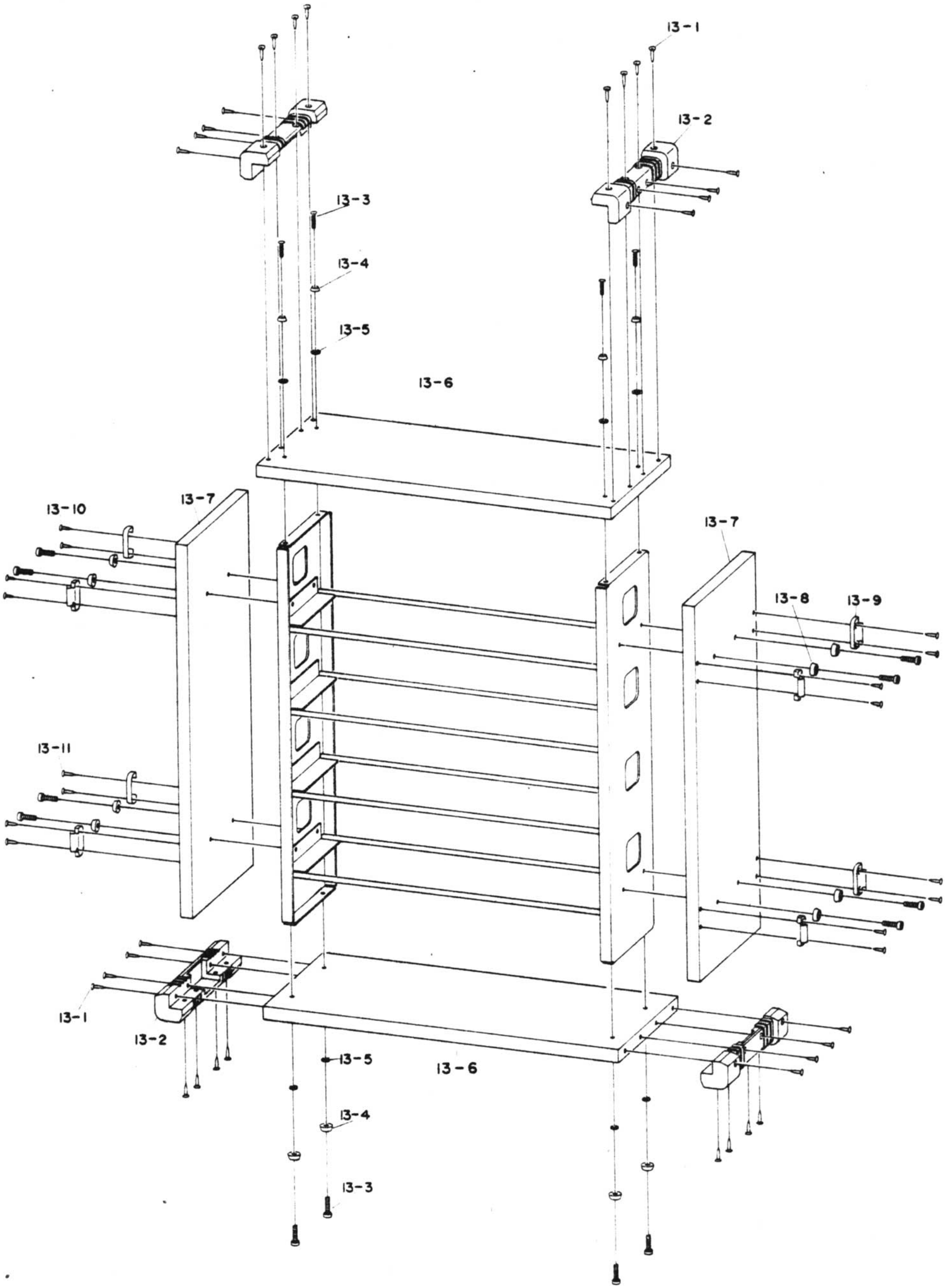

www.hifiengine.com

PARTS LIST 13-2 For Model 2SD2, QXD or 1/2QXD

Ref. No.	Description	Parts No.	Notes
13-1	Wood Screw	EZ-09-M3.5x20	
13-2	Protector	CS-264-005	
13-3	Screw	EZ-09-M3x25	
13-4	Display Washer	TY-800-021	
13-5	Sheet	TY-800-017	
13-6	Case Top Board	CS-261-004	
13-7	Case Side Board	CS-263-004	
13-8	Display Washer	TY-800-014	
13-9	Latch	CA-39-C-15	
13-10	Wood Screw	EZ-09-M3.1x16	
13-11	Cap Screw	EZ-09-M4x25	

www.hifiengine.com

EXPLODED VIEW 13-2 For Model 2SD2, QXD or 1/2QXD

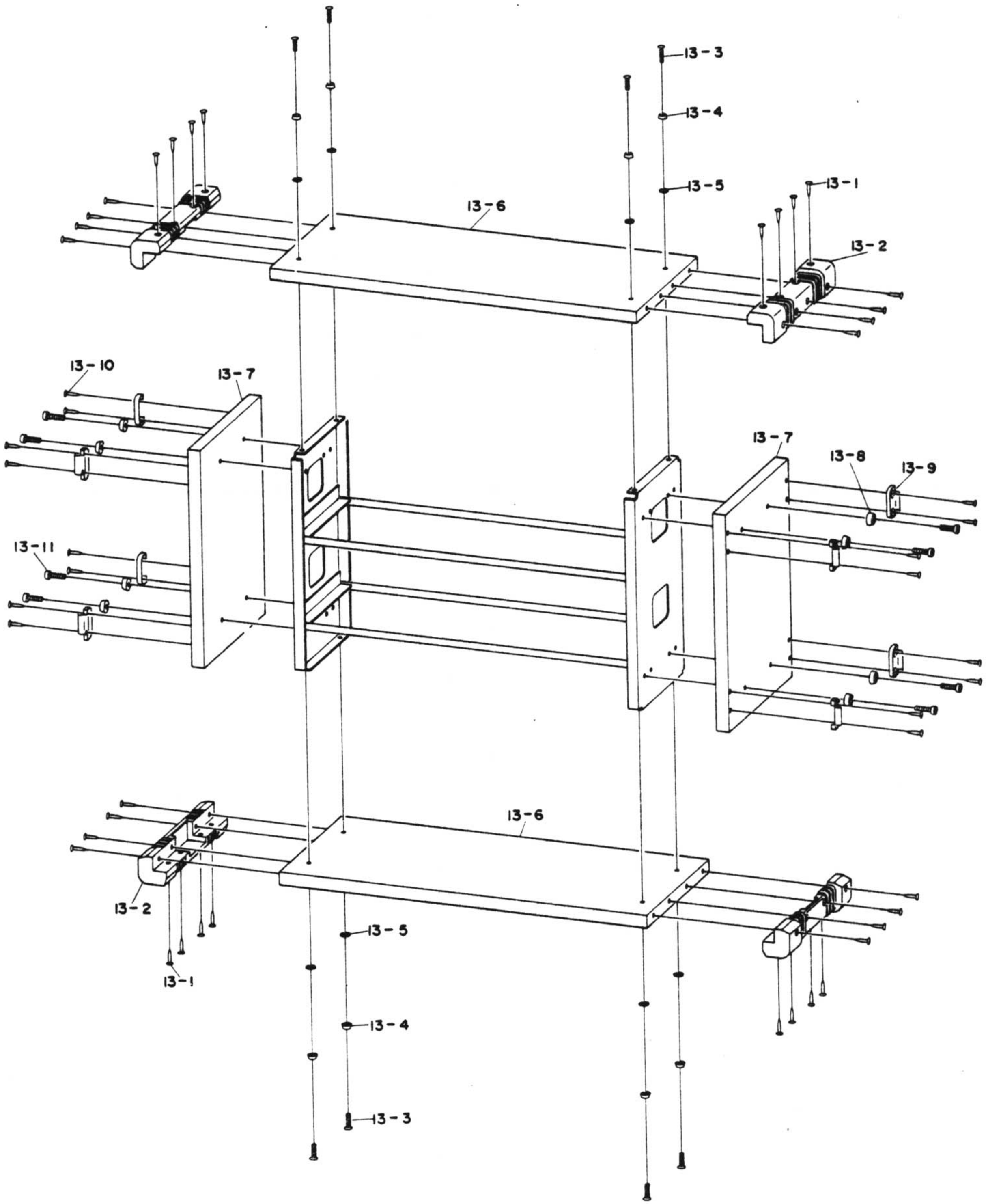

PARTS LIST 14-1 For Model 8SD

Ref. No.	Description	Parts No.	Notes
14-1	Screw	EZ-09-M3x6	
14-2	Amplifier	AF-237	
14-3	Screw	EZ-09-M3x8	
14-4	Display Washer	TY-800-021	
14-5	Sheet	TY-800-017	
14-6	Blank Panel	CS-261-005	
14-7	Stud	ST-090	
14-8	Frame Stud	CS0251-007	
14-9	Amplifier Frame	CS-261-001	
14-10	Screw	EZ-09-M3x6	
14-11	Cover	CS-261-006	
14-12	Plain Washer	EZ-09-M3	
14-13	Screw	EZ-09-M3x6	

www.hifiengine.com

EXPLODED VIEW 14-1 For Model 8SD

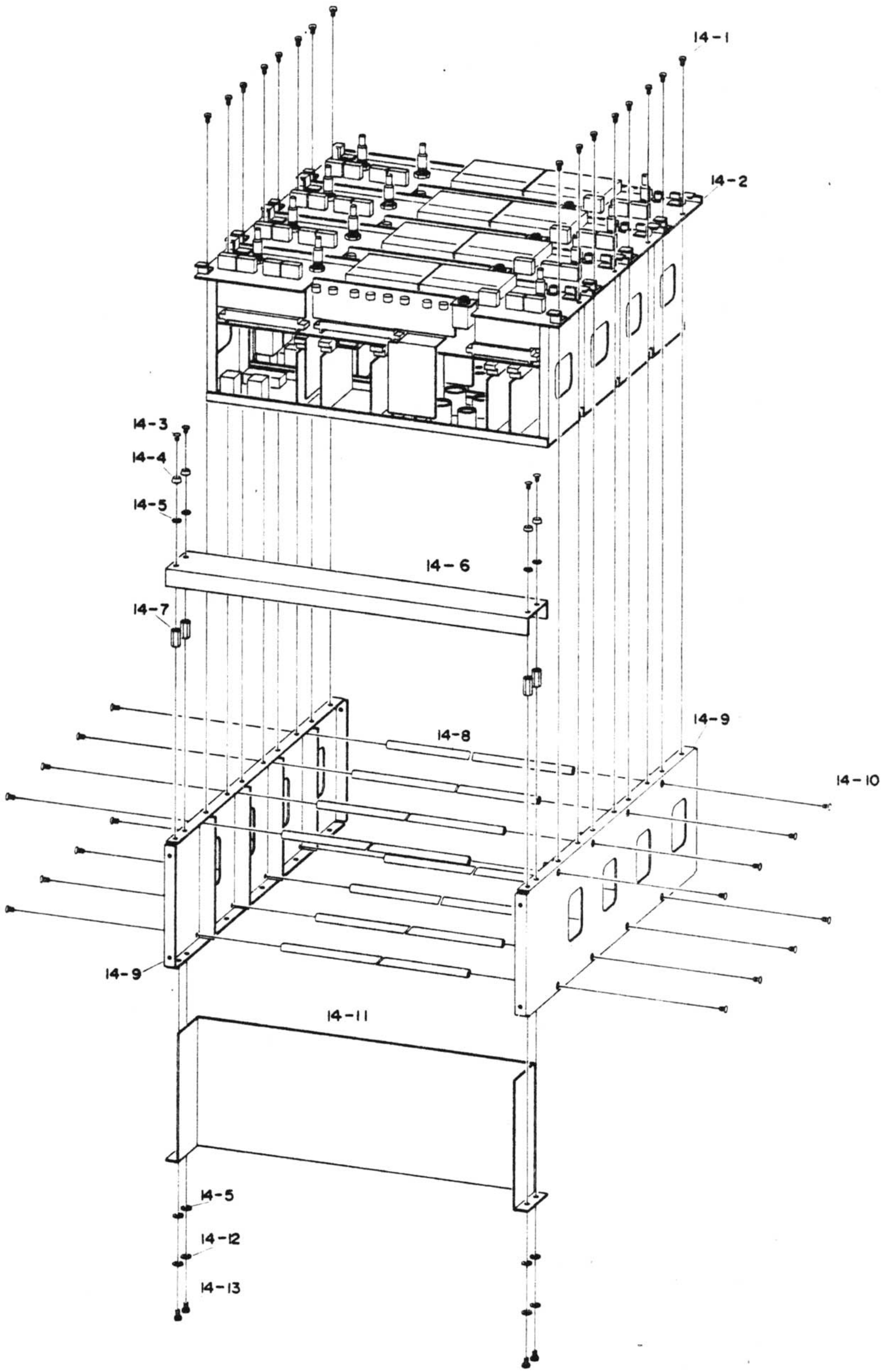

www.hifiengine.com

PARTS LIST 14-2 For Model QXD or 1/2QXD

Ref. No.	Description	Parts No.	Notes
14-1	Screw	EZ-09-M3x6	
14-2	Amplifier	AF-237	
14-3	Screw	EZ-09-M3x8	
14-4	Display Washer	TY-800-021	
14-5	Sheet	TY-800-017	
14-6	Blank Panel	CS-261-005	
14-7	Stud	ST-090	
14-8	Frame Stud	CS-0251-007	
14-9	Amplifier Frame	CS-263-001	
14-10	Screw	EZ-09-M3x6	
14-11	Cover	CS-261-006	
14-12	Plain Washer	EZ-09-M3	
14-13	Screw	EZ-09-M3x6	

www.hifiengine.com

EXPLODED VIEW 14-2 For Model QXD or 1/2QXD

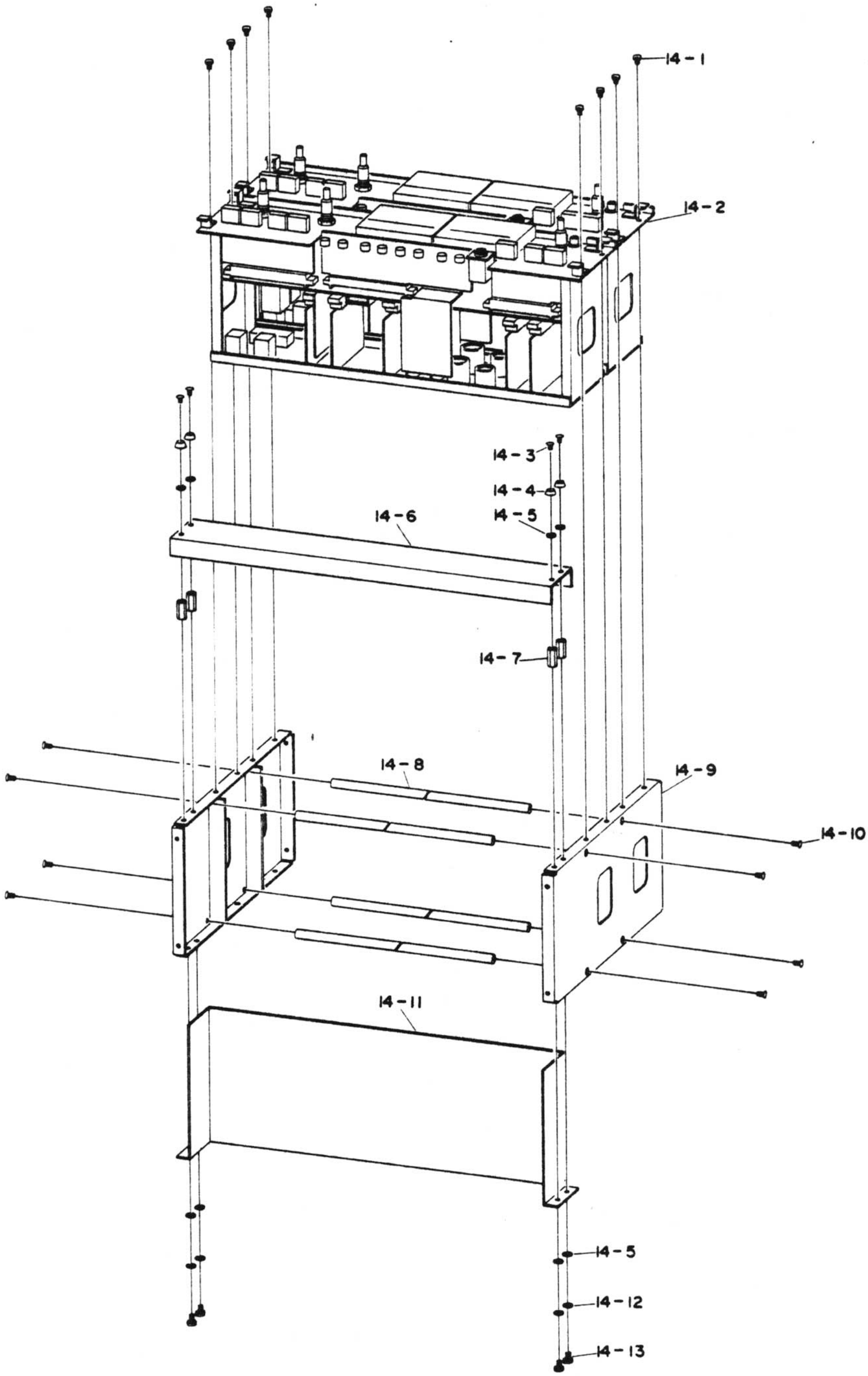

PARTS LIST 14-3 For Model 2SD2

Ref. No.	Description	Parts No.	Notes
14-1	Screw	EZ-09-M3x6	
14-2	Amplifier	AF-237	
14-3	Screw	EZ-09-M3x8	
14-4	Display Washer	TY-800-021	
14-5	Sheet	TY-800-017	
14-6	Blank Panel	CS-261-005	
14-7	Stud	ST-090	
14-8	Frame Stud	CS-0251-007	
14-9	Amplifier Frame	CS-263-001	
14-10	Screw	EZ-09-M3x6	
14-11	Cover	CS-261-006	
14-12	Plain Washer	EZ-09-M3	
14-13	Screw	EZ-09-M3x6	
14-14	Blank Panel	CS-261-005	
14-15	Blank Panel	CS-275-002	

www.hifiengine.com

EXPLODED VIEW 14-3 For Model 2SD2

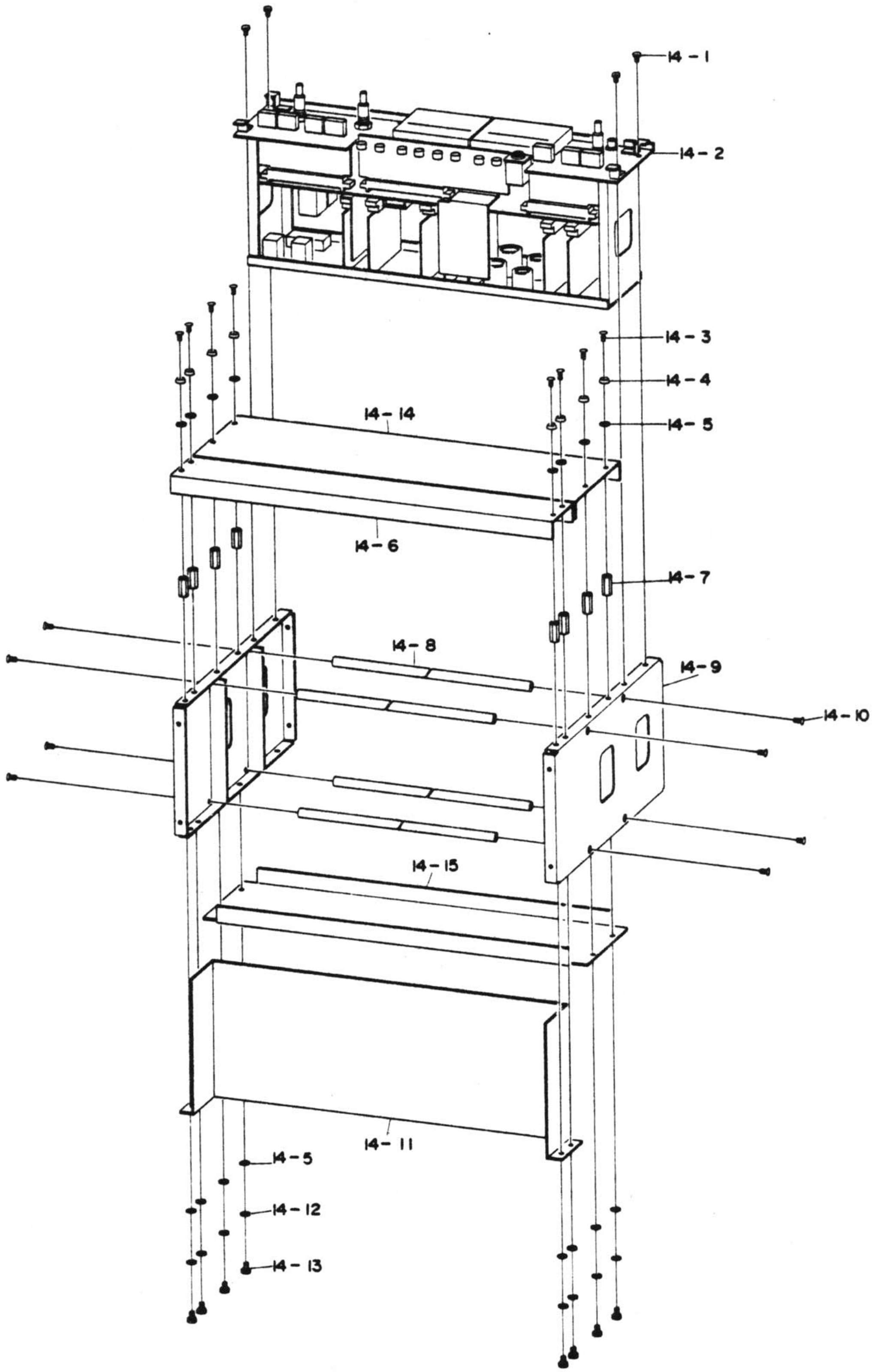

www.hifiengine.com

PARTS LIST 15

Ref. No.	Description	Parts No.	Notes
15-1	Knob	NB-31-035	
15-2	Set Screw	EZ-09-M3x5	
15-3	Spacer	TY-100-031	
15-4	Knob	NB-31-036	
15-5	Spacer	TY-100-042	
15-6	Push Button	NB-19-4094(302)	
15-7	Push Button B	NB-19-4094B	
15-8	Variable Resistor Escutcheon	TY-100-010	
15-9	Push Button A	NB-19-4094A	
15-10	Display Panele	AF-237-002	
15-11	VU Meter	MT-11-023	
15-12	Lamp Assembly	PL-19-005	
15-13	VU PCB Assembly	PA-401	
15-14	Spring Washer	EZ-09-M3	
15-15	Screw	EZ-09-M3x6	
15-16	Screw	EZ-09-M3x6	
15-17	Blind	TY-900-031	
15-18	Blind	TY-900-029	
15-19	Screw	EZ-09-M2.6x4	
15-20	Amplifier Mounting Base	AF-234-002	
15-21	Switch PCB Assembly B	PA-305	
15-22	Stereo Jack	CN-09-LJ-109	
15-23	Switch PCB Assembly A	PA-304	
15-24	Nut	EZ-09-M3	
15-25	Slide Switch C	SW-39-SL242B4	
15-26	Shielding Plate A	AF-198-002	
15-27	Amplifier Chassis	AF-234-004	
15-28	Cord Stopper	EZ-09-SN-6A	
15-29	Screw	EZ-09-M3x10	
15-30	VR PCB Assembly	PA-373	
15-31	Connector	CN-09-SRC06A16-10P	

www.hifiengine.com

Ref. No.	Description	Parts No.	Notes
15-32	Mother PCB Assembly	PA-345	
15-33	Connector	CN-09-16-P4F	
15-34	Reproduce Amplifier PCB Assembly	PA-372	
15-35	SEL REP Amplifier PCB Assembly	PA-375	
15-36	Record Amplifier PCB Assembly	PA-371	
15-37	Test OSC PCB Assembly	PA-379	
15-38	BIAS Buffer Amprifier PCB Assembly	PA-376(8SD),PA-419(½QXD), PA391(QXD),PA-418($2SD_2$)	
15-39	Connector	CN-09-QS-10M(I)	
15-40	Jack	CN-09-LJ-110-1-2	
15-41	Shielding Plate B	AF-198-003	
15-42	Rear Panel	AF-237-004	
15-43	Shielding Plate C	AF-198-004	
15-44	Screw	EZ-09--M3x10	
15-45	Connector	CN-09-MR-8M	
15-46	Screw	EZ-09-2.6x8	
15-47	Sheet	TY-800-017	
15-48	Plain Washer	EZ-09-M3	
15-49	Screw	EZ-09-M3x8	
15-50	Socket	CN-09-XLR-3-31	
15-51	Socket	CN-09-XLR-3-32	
15-52	Screw	EZ-09-M3x6	

www.hifiengine.com

EXPLODED VIEW 15

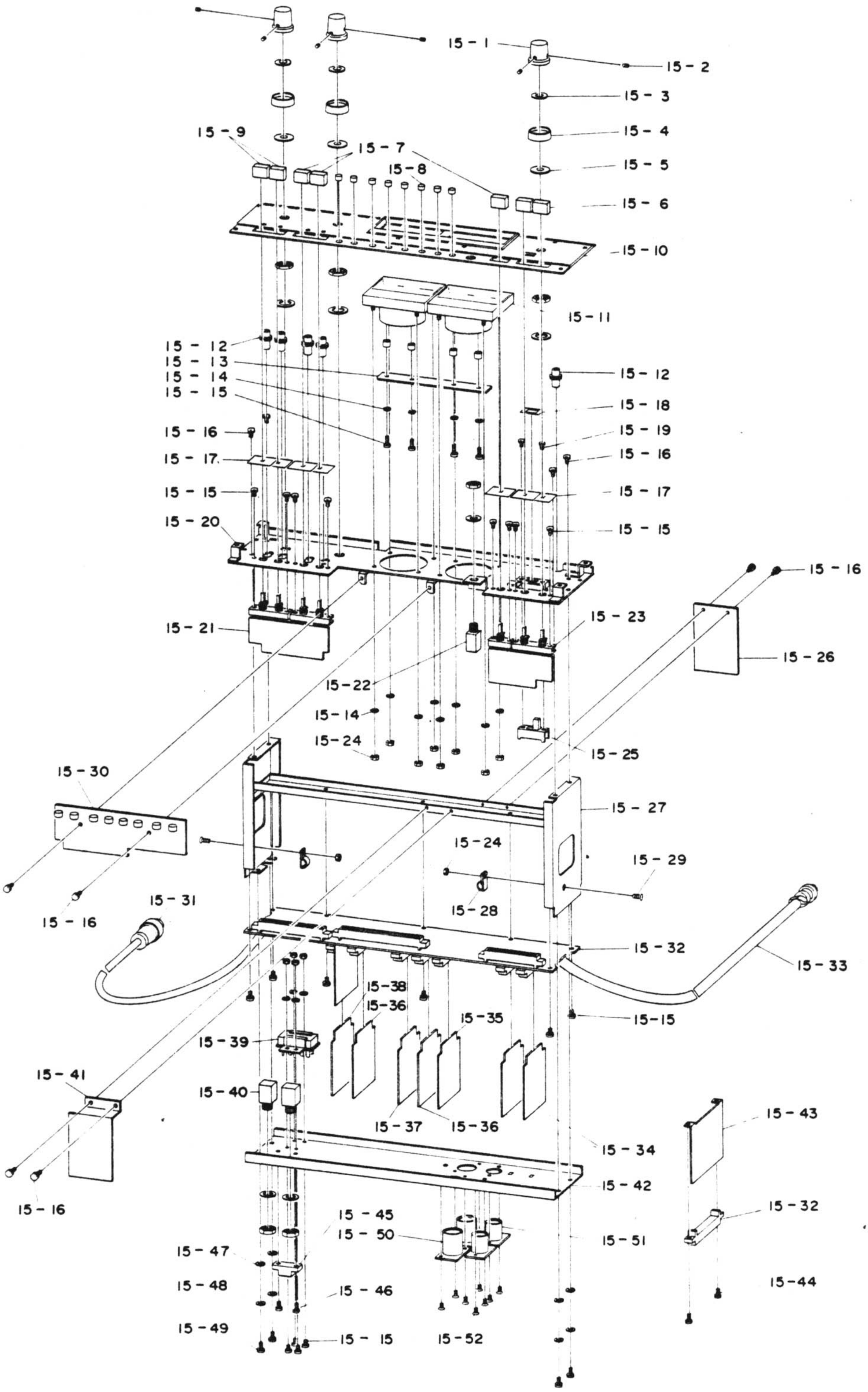

SIMPLIFIED DIAGRAM FOR 8SD AND QXD (at 1KHZ)

Values in the parentheses is on model QXD

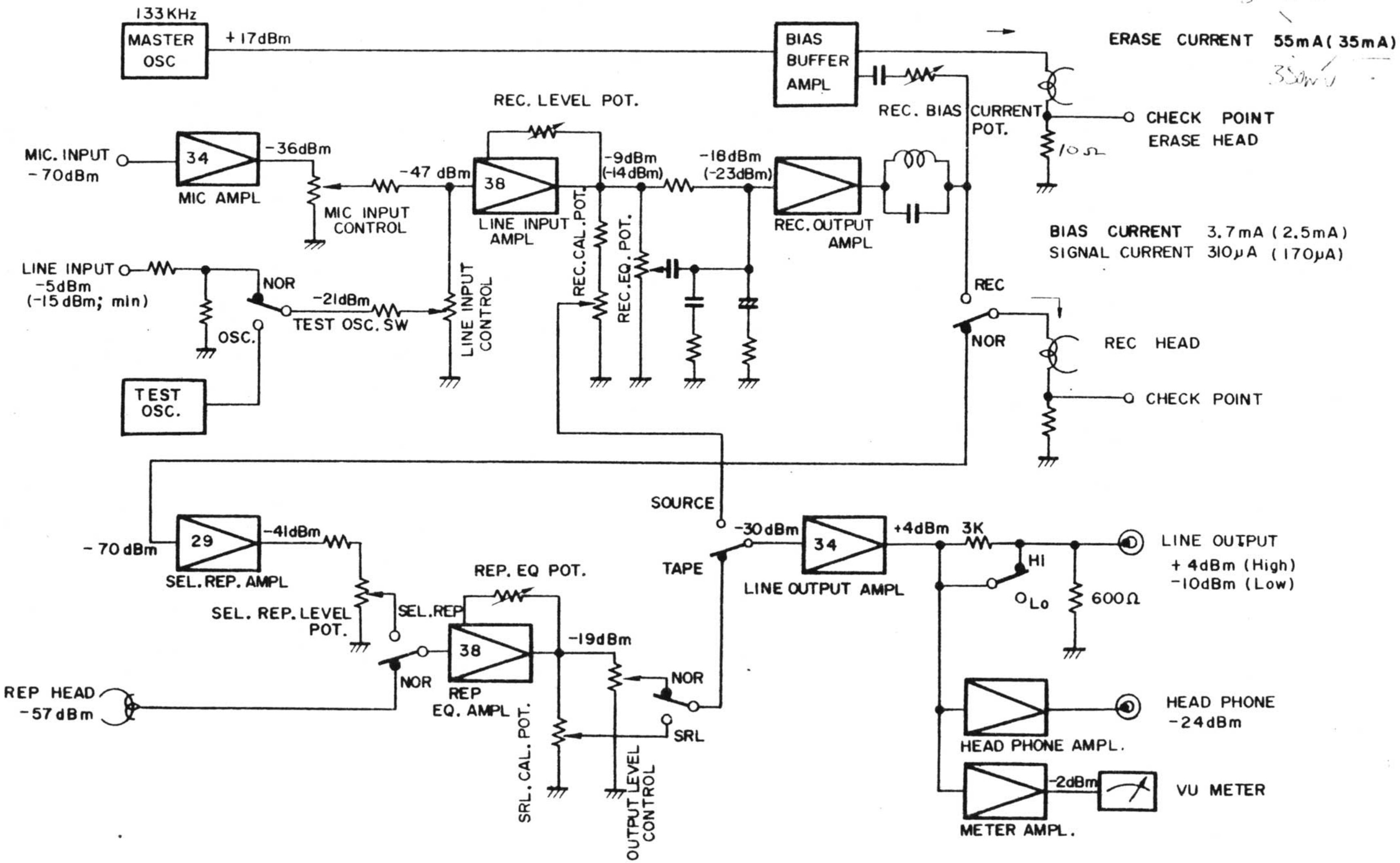

RECORD AMPLIFIER UNIT (PA-371)

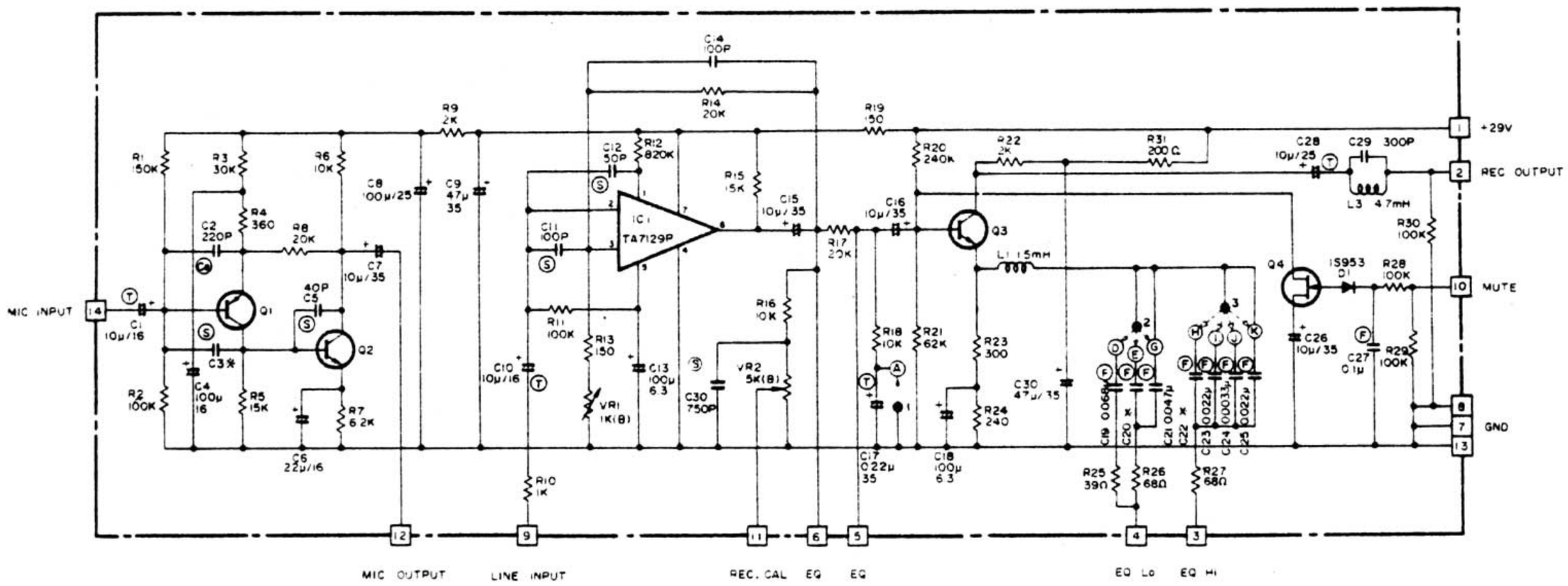

NOTES 1. [ ] : ON PRINTED CIRCUIT BOARD

2. [1] : TERMINALS

3. UNLESS OTHERWISE INDICATED:
   ALL RESISTORS VALUES ARE IN OHM, ¼WATT, 5%.
   ALL CAPACITORS VALUES ARE IN FARADS, 10%.

4. LETTER SYMBOLS ARE AS FOLLOWS:
   - (F) : MYLAR FILM CAPACITOR
   - (T) : TANTALUM ELE. CAPACITOR
   - (S) : POLYSTYREN CAPACITOR
   - (Ce) : CERAMIC CAPACITOR

5. TRANSISTORS ARE FOLLOWS:
   - Q1 : 2SA750 or 2SA666
   - Q2 : 2SC1222(2) or 2SC644
   - Q3 : 2SC945 L or 2SC828A
   - Q4 : 2SK34(C) or (D)

6. EQALIZER CONNECTION IS FOLLOWS

	SPEED	TERMINALS		
		1	2	3
NAB	15 & 7.5 7.5 & 3.75	(I) (I)	G D	J I
CCIR	15 & 7.5 7.5 & 3.75	A A	G D	J I

RECORD AMPLIFIER P.C.B Ass'y PA-371 (PM-871A)

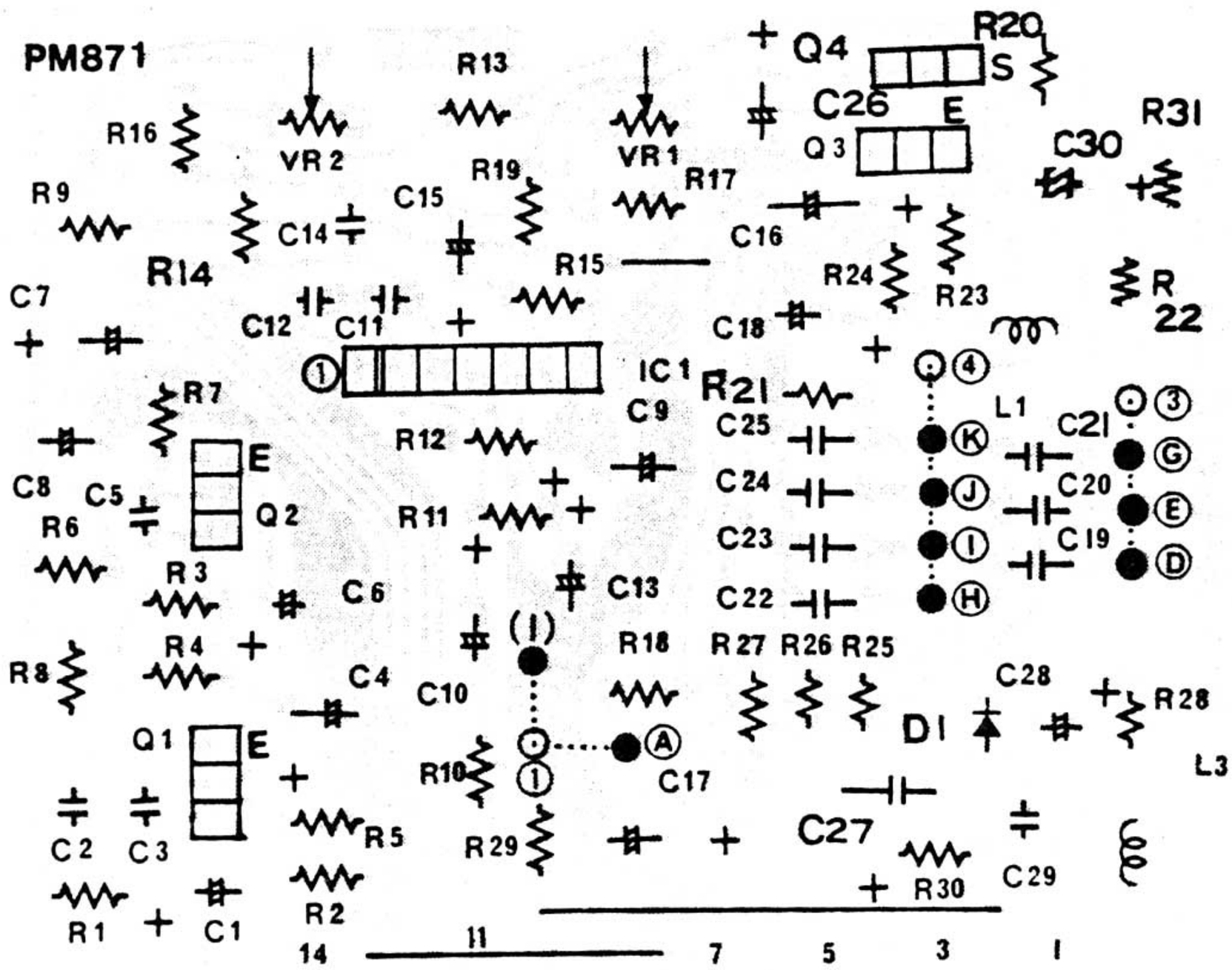

REPRODUCE AMPLIFIER UNIT (PA-372)

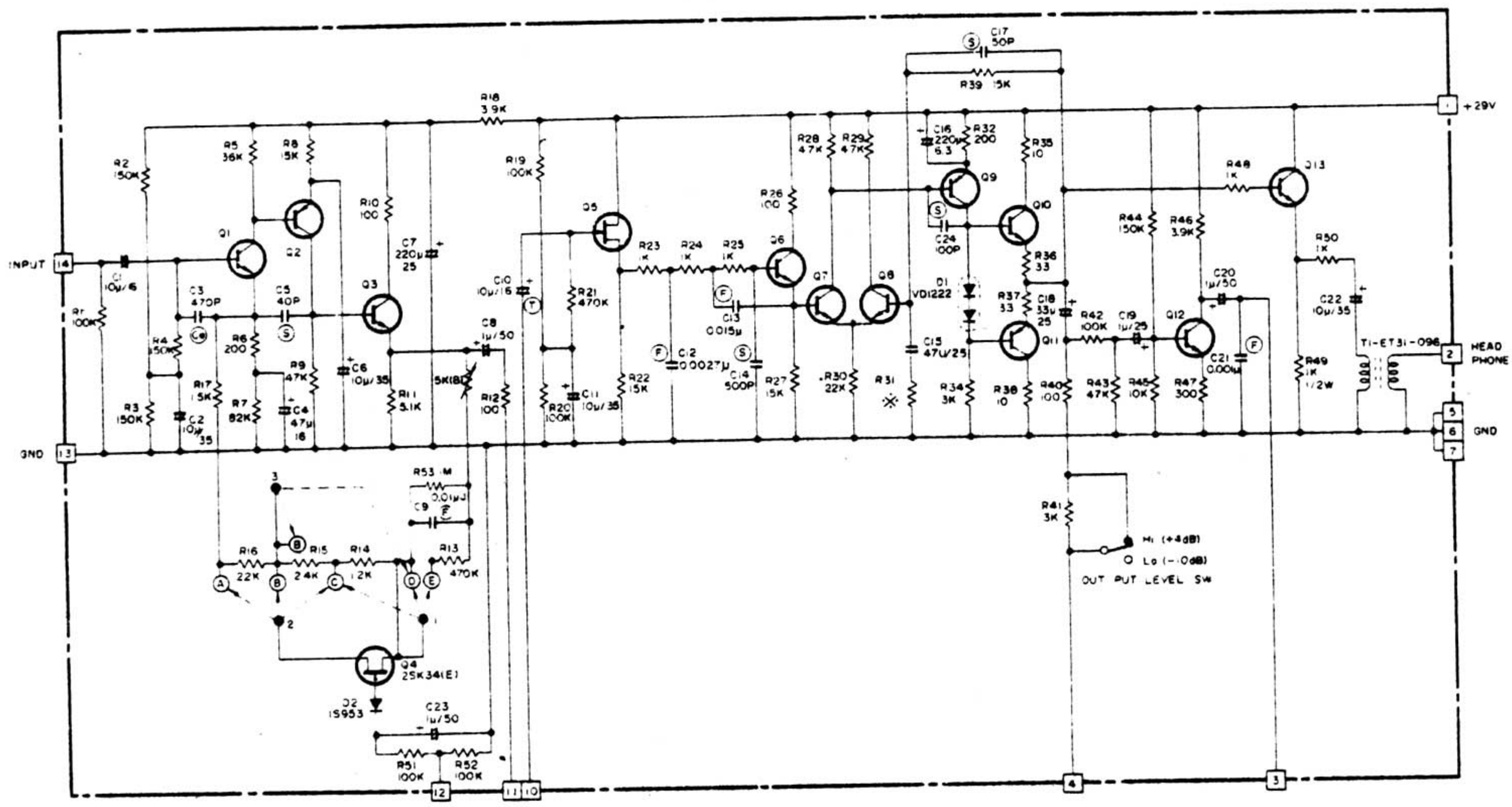

NOTES 1. [ ] : ON PRINTED CIRCUIT BOARD

2. [1] : TERMINALS

3. UNLESS OTHERWISE INDICATED:
   ALL RESISTORS VALUES ARE IN OHM, ¼WATT, 5%.
   ALL CAPACITORS VALUES ARE IN FARADS, 10%.

4. LETTER SYMBOLS ARE FOLLOWS:
   (T) : TANTALUME ELE. CAPACITOR
   (F) : MYLAR FILM CAPACITOR
   (S) : POLYSTYREN CAPACITOR
   (Ce) : CERAMIC CAPACITOR

5. TRANSISTORS ARE FOLLOWS:
   Q1,3 : 2SC1222(2) or 2SC644
   Q2 : 2SA750 or 2SA666
   Q4,Q5 : 2SK34(D)
   Q6,7,8,12 : 2SC945 L or 2SC828A
   Q9 : 2SA733 or 2SA564A
   Q10 : 2SD571 or 2SC1318] COMPLIMENTALY PAIR
   Q11 : 2SB605 or 2SA720]
   Q13 : 2SD571 or 2SC1318

REPRODUCE AMPLIFIER P.C.B Ass'y PA-372 (PM-872A)

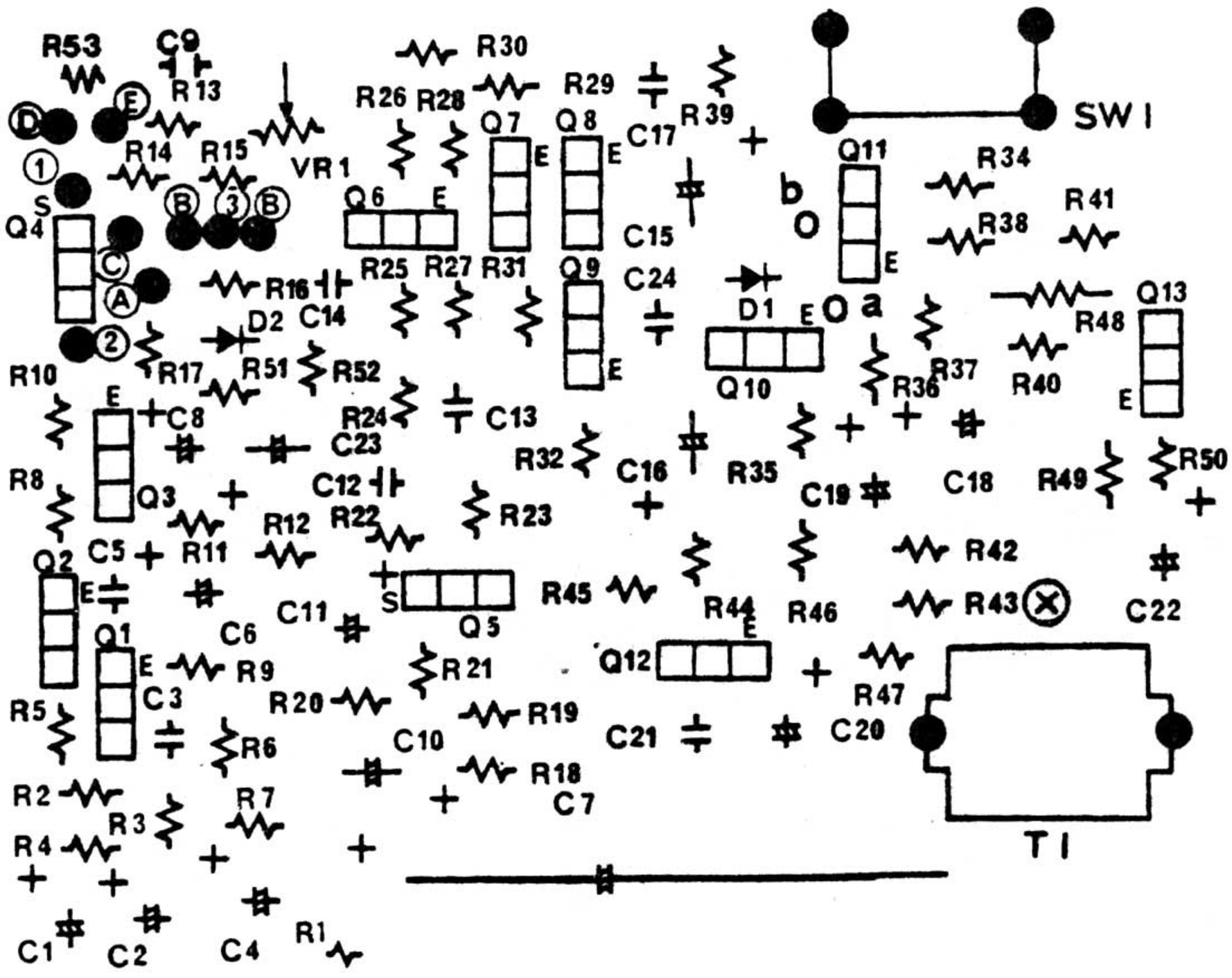

SEL. REP. AMPLIFIER (PA-375)

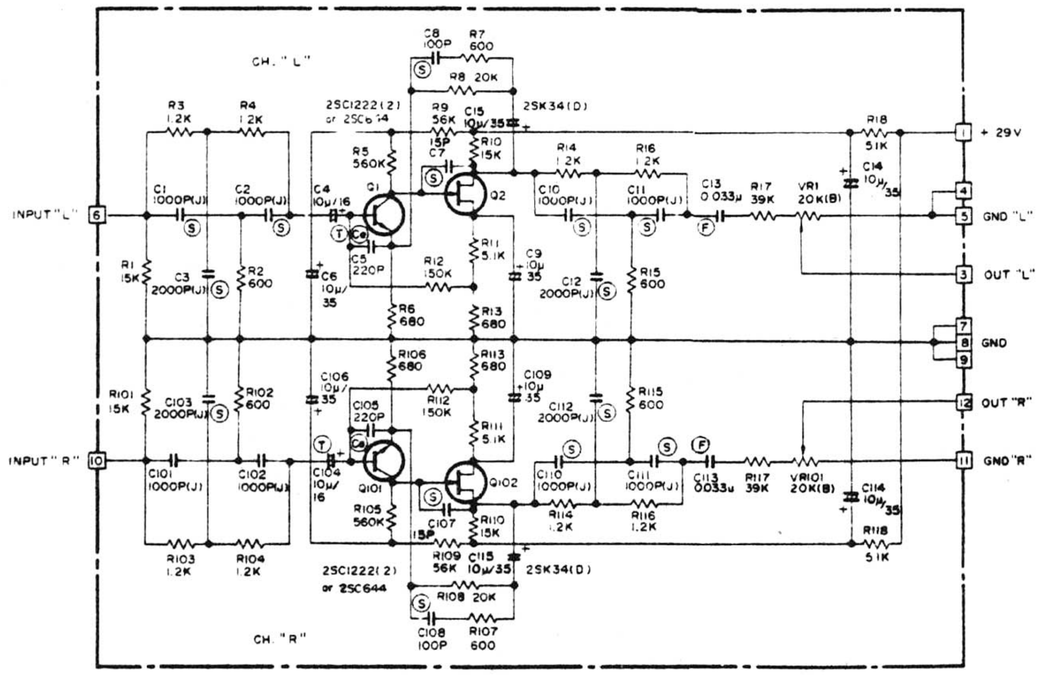

NOTES 1. [ ] : ON PRINTED CIRCUIT BOARD
2. [1] : TERMINALS
3. UNLESS OTHERWISE INDICATED:
ALL RESISTORS VALUES ARE IN OHM, ¼WATT, 5%.
ALL CAPACITORS VALUES ARE IN FARADS, 10%.
4. LETTER SYMBOLS ARE FOLLOWS:
Ⓕ : MYLAR FILM CAPACITOR
Ⓢ : POLYSTYREN CAPACITOR
Ⓣ : TANTALUM ELE. CAPACITOR
J : TOLERANCE 5%
5. TRANSISTORS ARE FOLLOWS
Q1,101 : 2SC1222(2) or 2SC644
Q2,102 : 2SK34(D)

SEL. REP. AMPLIFIER P.C.B. Ass'y PA-375 (PM-874A)

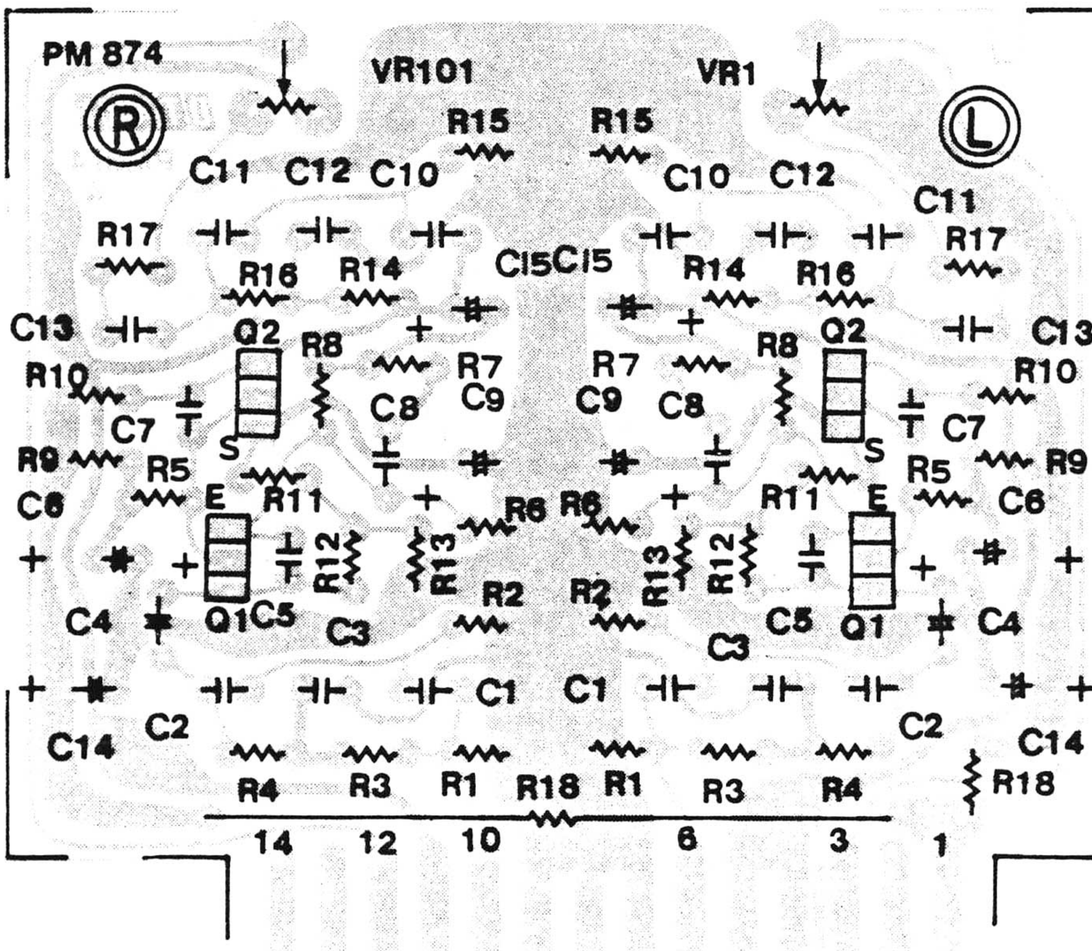

TEST OSCILLATOR UNIT (PA-379)

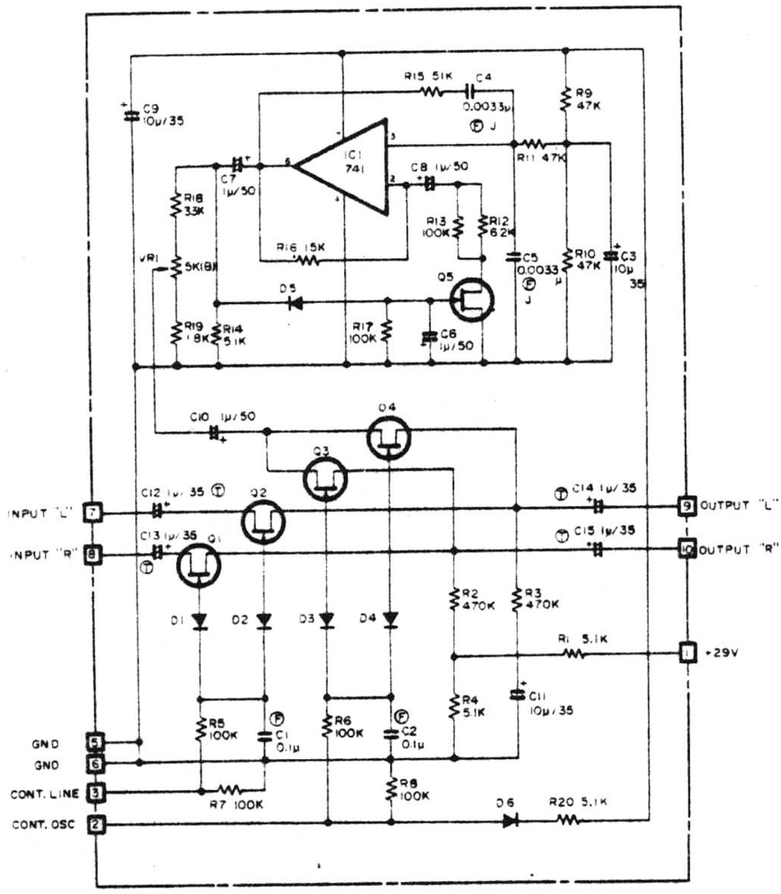

NOTES 1. [ ] : ON PRINTED CIRCUIT BOARD
2. [1] : TERMINALS
3. UNLESS OTHERWISE INDICATED:
ALL RESISTORS VALUES ARE IN OHM, ¼WATT, 5%.
ALL CAPACITORS VALUES ARE IN FARADS, 10%.
4. LETTER SYMBOLS ARE FOLLOWS:
Ⓕ : MYLAR FILM CAPACITOR
Ⓣ : TANTALUM ELE. CAPACITOR
J : TOLERANCE 5%
5. TRANSISTORS AND DIODES ARE FOLLOWS:
Q1 to 4 : 2SK34(E)
Q5 : 2SK34(C)
D1 to 6 : 1S953

TEST OSCILLATOR P.C.B. Ass'y PA-379 (PM-878)

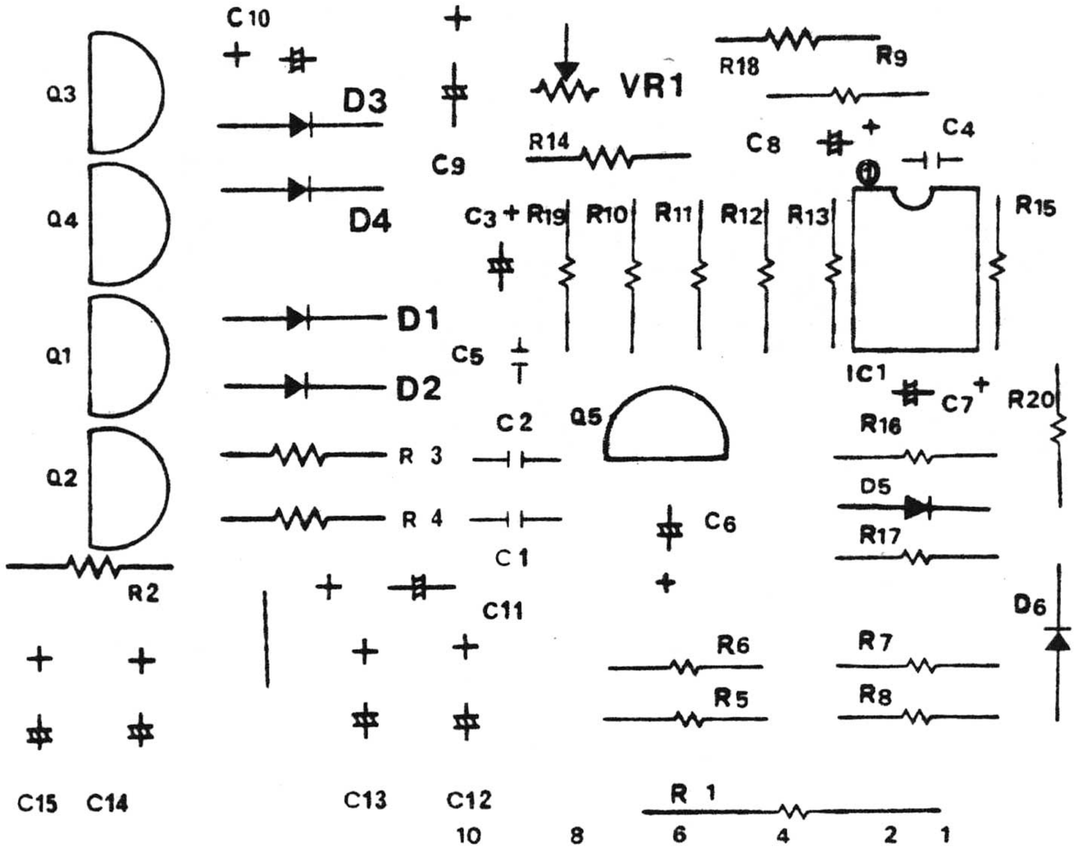

BIAS BUFFER AMPLIFIER UNIT

PA-418 for 2SD2 **PA-419 for 1/2QXD**
PA-391 for QXD **PA-376 for 8SD**

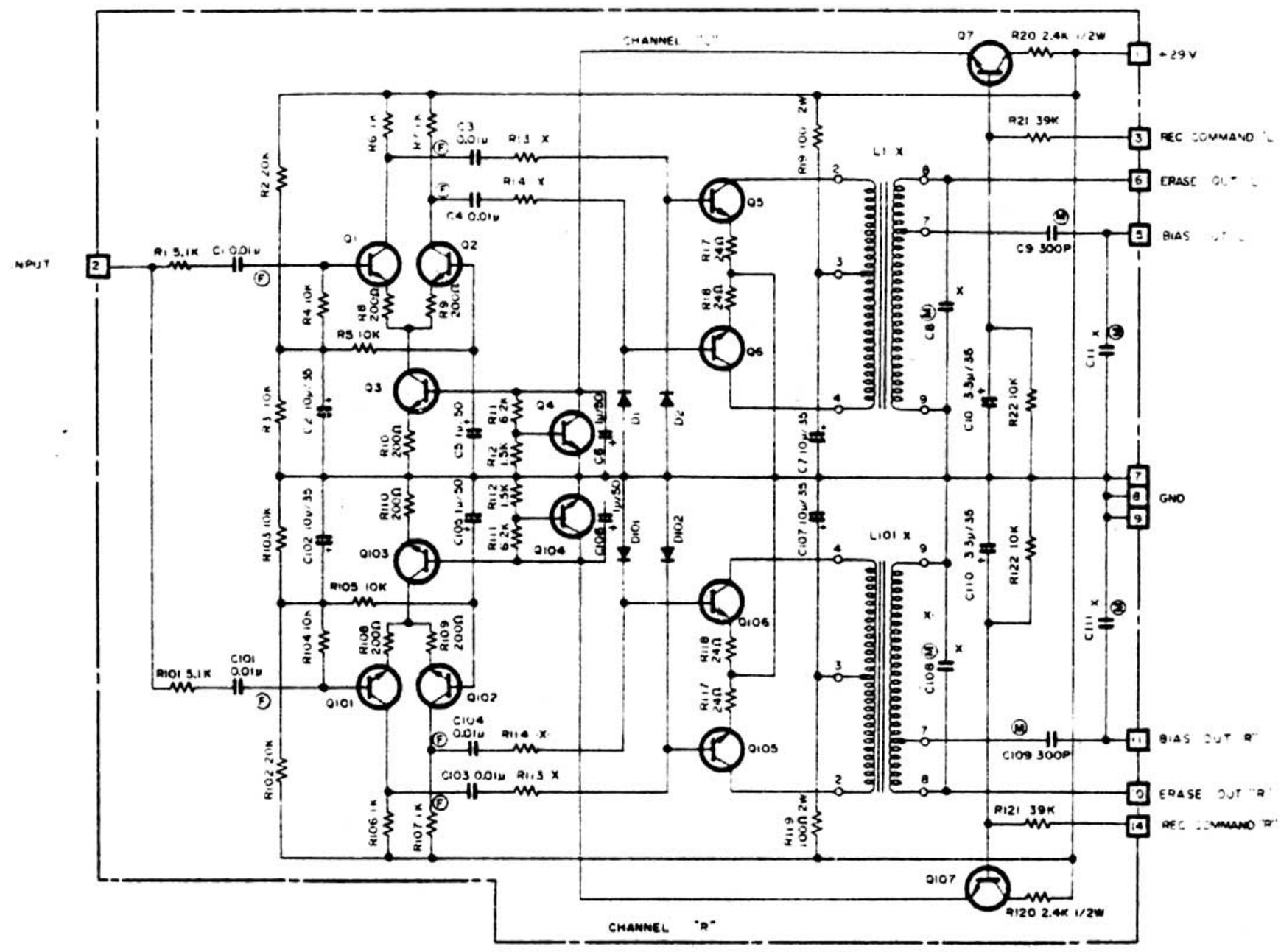

NOTES 1. [ ]: ON PRINTED CIRCUIT BOARD
2. [1] : TERMINALS
3. UNLESS OTHERWISE INDICATED:
ALL RESISTORS VALUES ARE IN OHM, ¼WATT, 5%.
ALL CAPACITORS VALUES ARE IN FARADS, 10%
4. LETTER SYMBOLS ARE FOLLOWS:
Ⓕ : MYLAR FILM CAPACITOR
Ⓜ : MICA CAPACITOR
5. TRANSISTORS AND DIODES ARE FOLLOWS:
Q1,2,3,4,7,
101, 102,103,104,107 : 2SC945 Ⓛ or 2SC828(A)
Q5,6,105,106 : 2SC1398(Q)
D1,2,101,102 : 1N914 or 1S953

6. DIFFERENCE ON EACH MODELS

MODELS	2SD2	QXD	½QXD	8SD
PARTS NO.	PA-418	PA-391	PA-419	PA-376
L1,101	ET31-219	ET31-196	ET31-220	ET31-203A
C8,108		0.001μF		0.005μF
R13,113, 14, 114		10kΩ		3.6kΩ

BIAS BUFFER AMPLIFIER P.C.B. Ass'y (PM-822A)

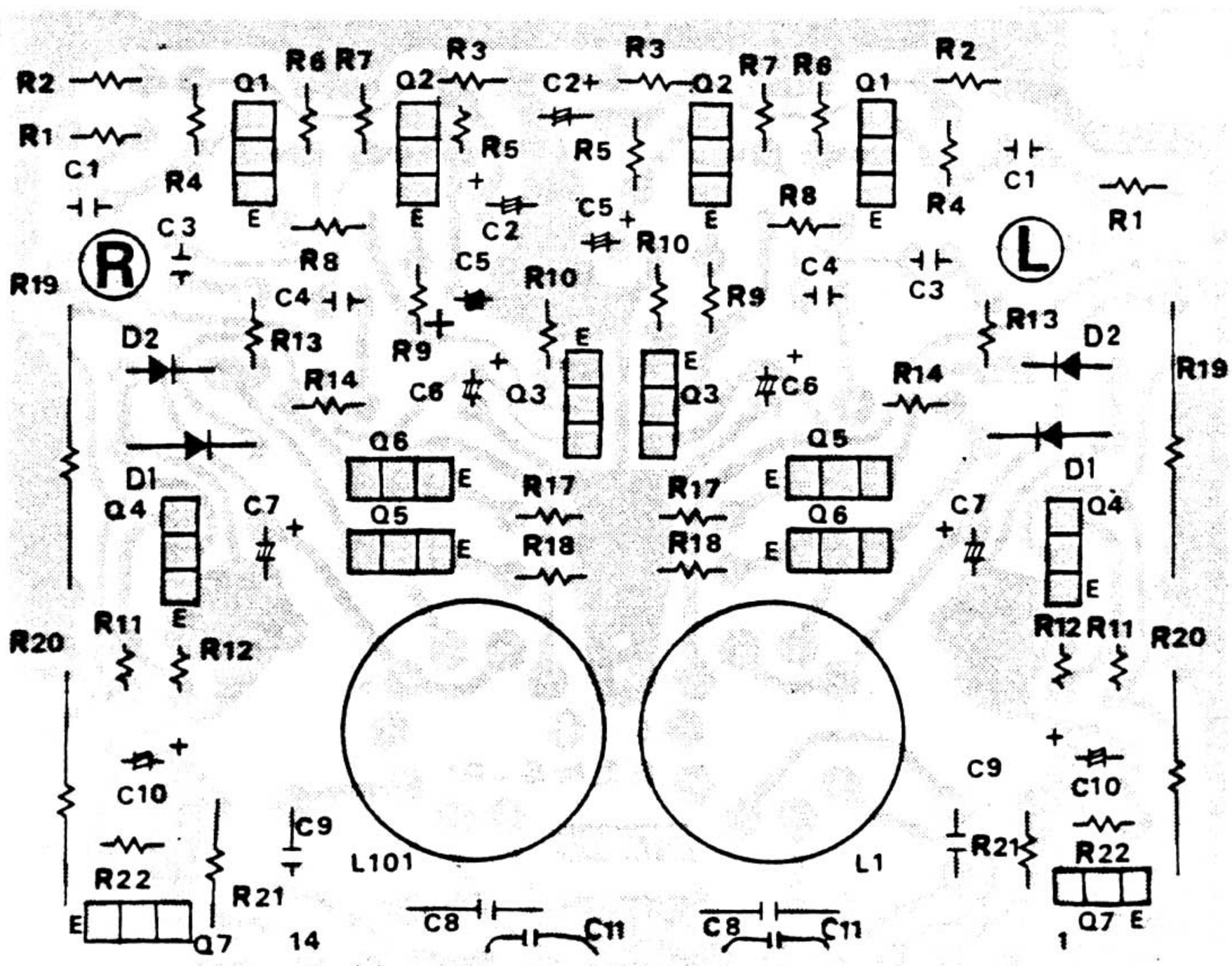

VR P.C.B. Assy PA-373 (PM-873)

Refer to RECORD REPRODUCE ELECTRONICS WIRING DIAGRAM.

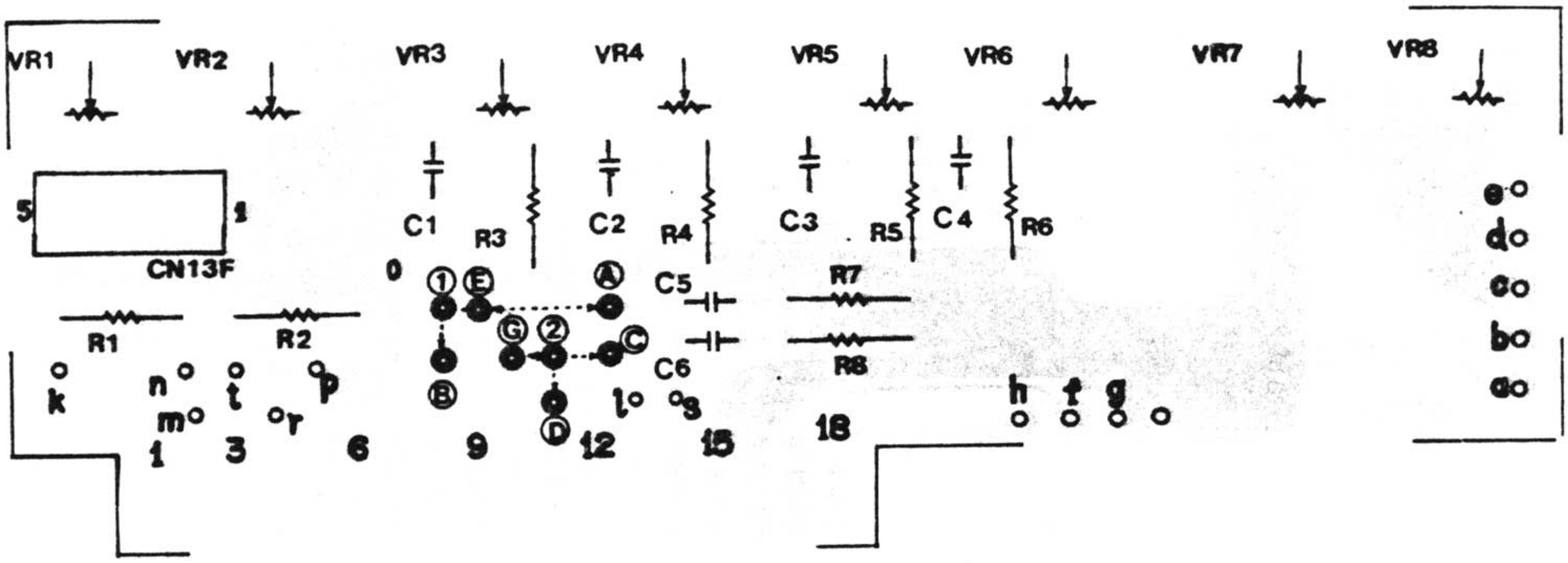

VU P.C.B. Ass'y PA-401 (PM-901)

Refer to RECORD REPRODUCE ELECTRONICS WIRING DIAGRAM.

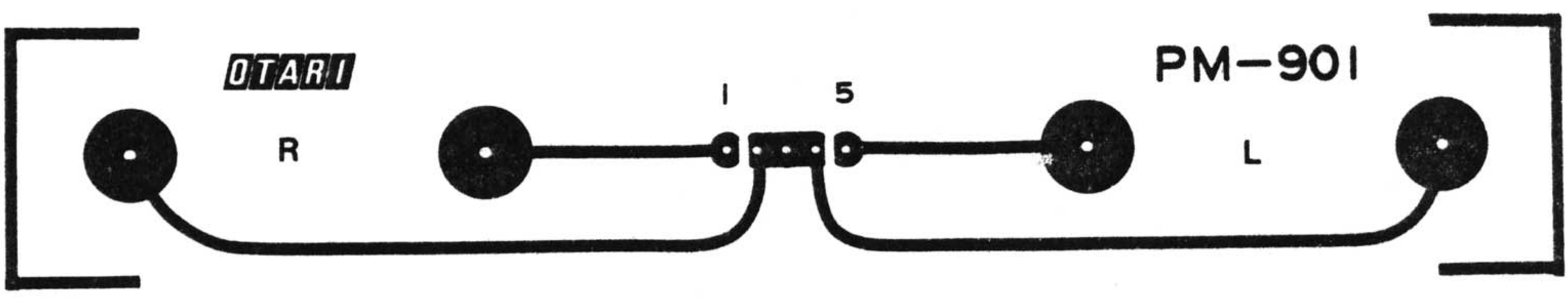

SWITCH P.C.B. Ⓐ Ass'y PA-304 (PM-812)

Refer to RECORD REPRODUCE ELECTRONICS WIRING DIAGRAM.

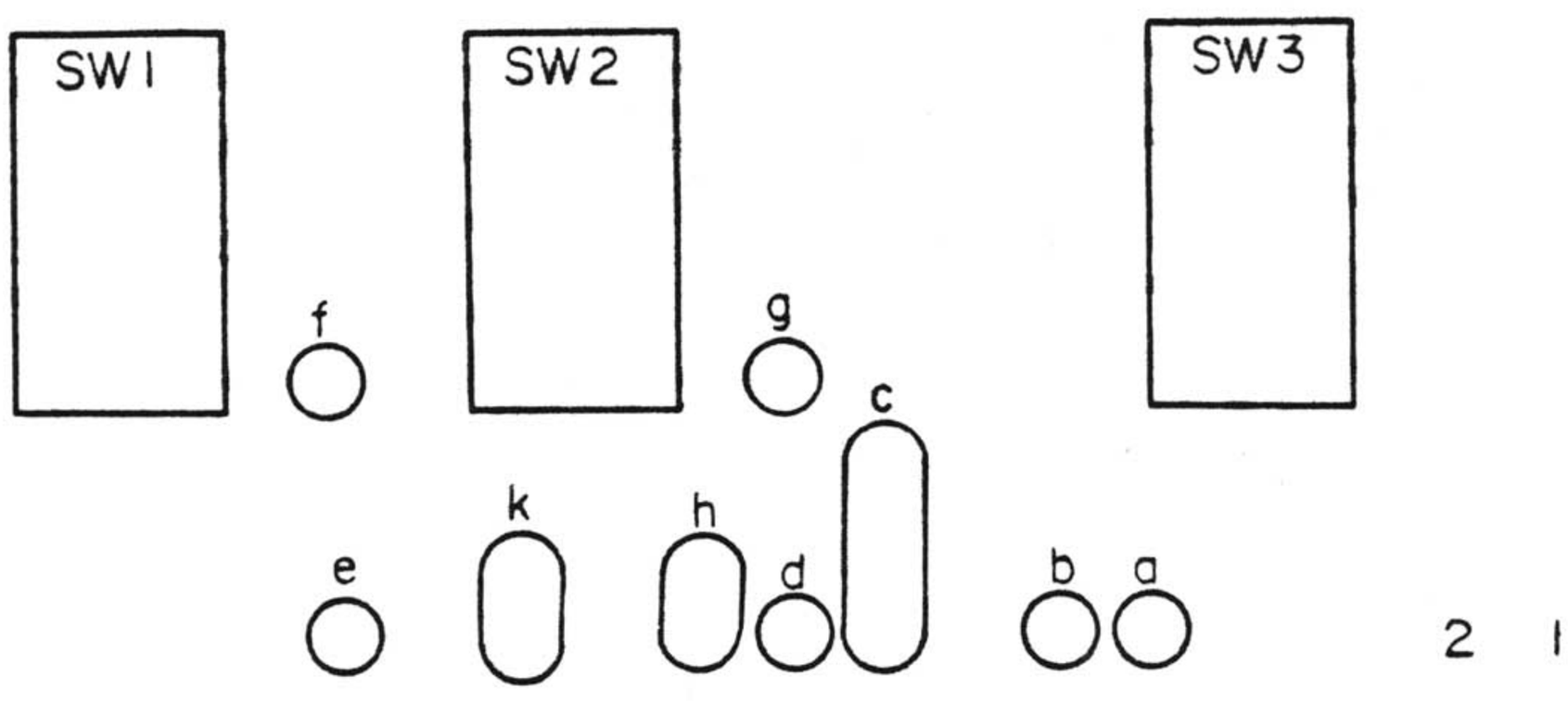

AMPLIFIER MOTHER P.C.B. Ass'y PA-345 (PM-817A)

Refer to RECORD REPRODUUCE ELECTRONICS WIRING DIAGRAM

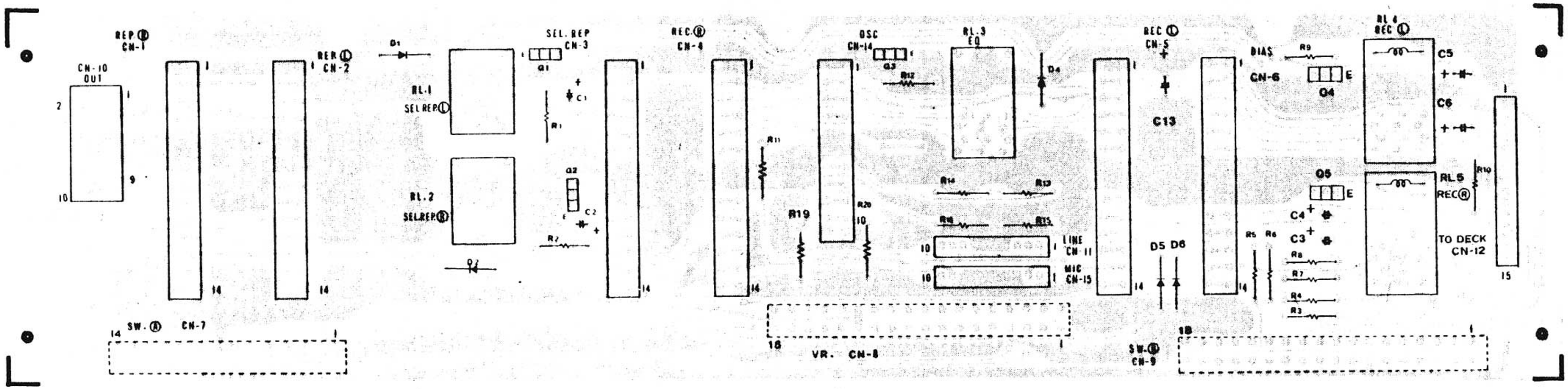

CONTROL UNIT (PA-316)

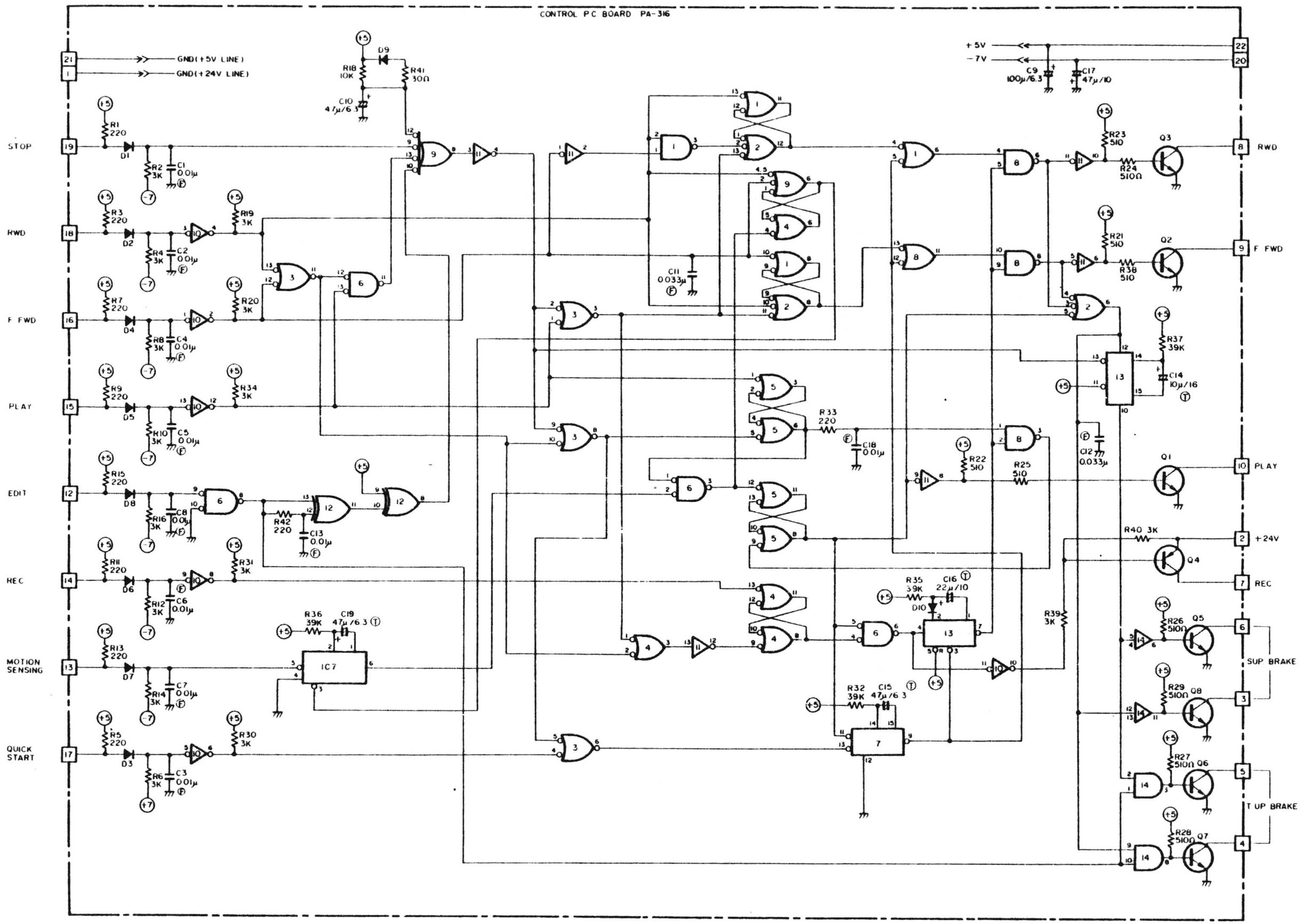

NOTES 1. [ ] : ON PRINTED CIRCUIT BOARD

2. [1] : TERMINALS

3. UNLESS OTHERWISE INDICATED:
ALL RESISTORS VALUES ARE IN OHM, ¼WATT, 5%.
ALL CAPACITORS VALUES ARE IN FARADS, 10%.

4. LETTER SYMBOLS ARE FOLLOWS:
Ⓕ : MYLOR FILM CAPACITOR
Ⓣ : TANTALUM ELE. CAPACITOR

5. TRANSISTORS, ICS AND DIODES ARE FOLLOWS:

IC1,4,5,8	SN7400N	IC11	SN7404N
IC2	SN7410N	IC12	SN7486N
IC3	SN7408N	IC14	SN7409N
IC6	SN7432N	D1～10	1N914 or 1S953
IC7,13	9602	Q1,5,6,7,8	2SC1384 or 2SD571
IC9	SN7420	Q2,3	2SC945 Ⓛ or 2SC373
IC10	SN7407	Q4	2SA720 or 2SB605

CONTROL P.C.B. Ass'y PA-316 (PM-825A)

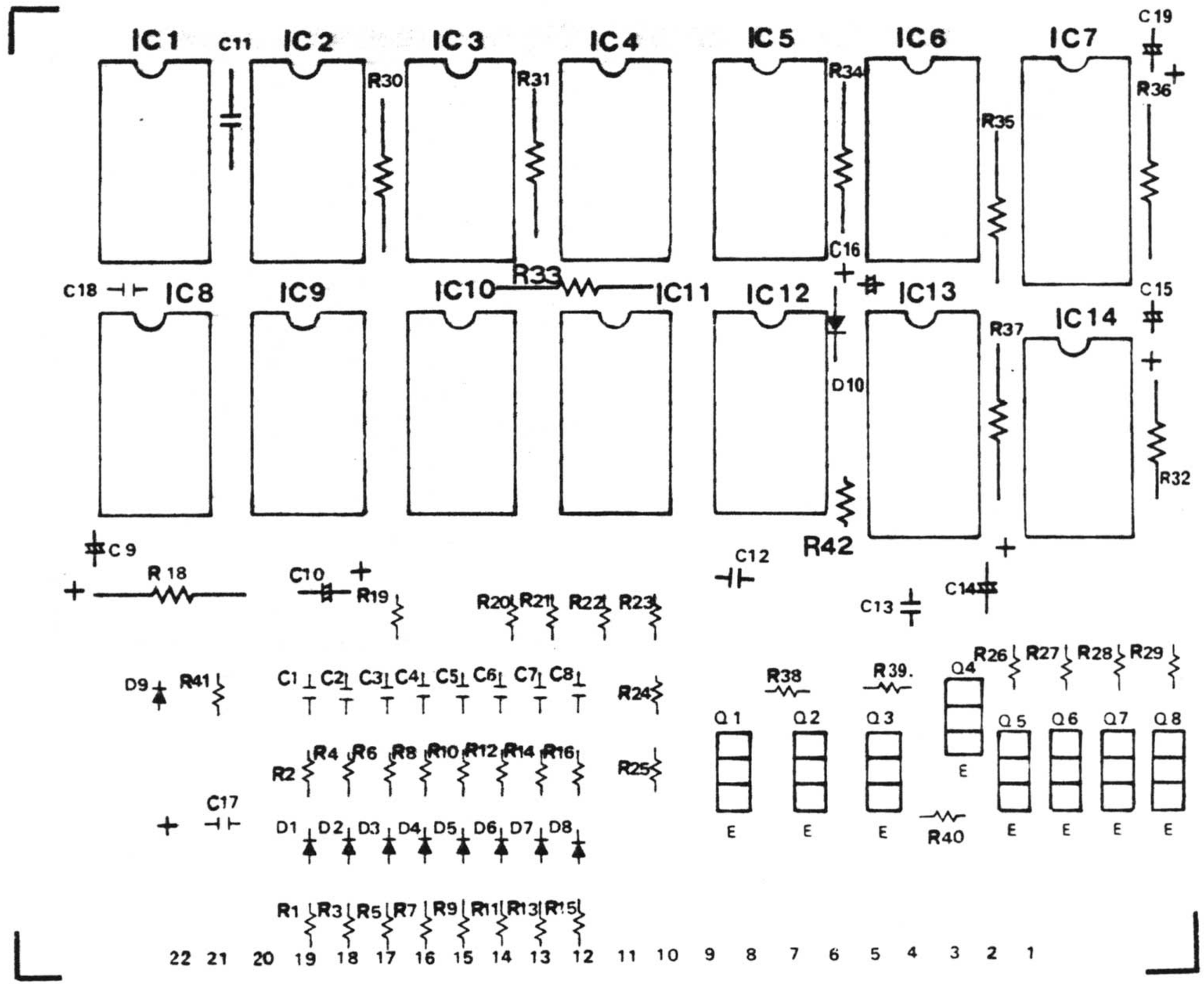

MASTER OSCILLATOR AND POWER SUPPLY UNIT (PA-315)

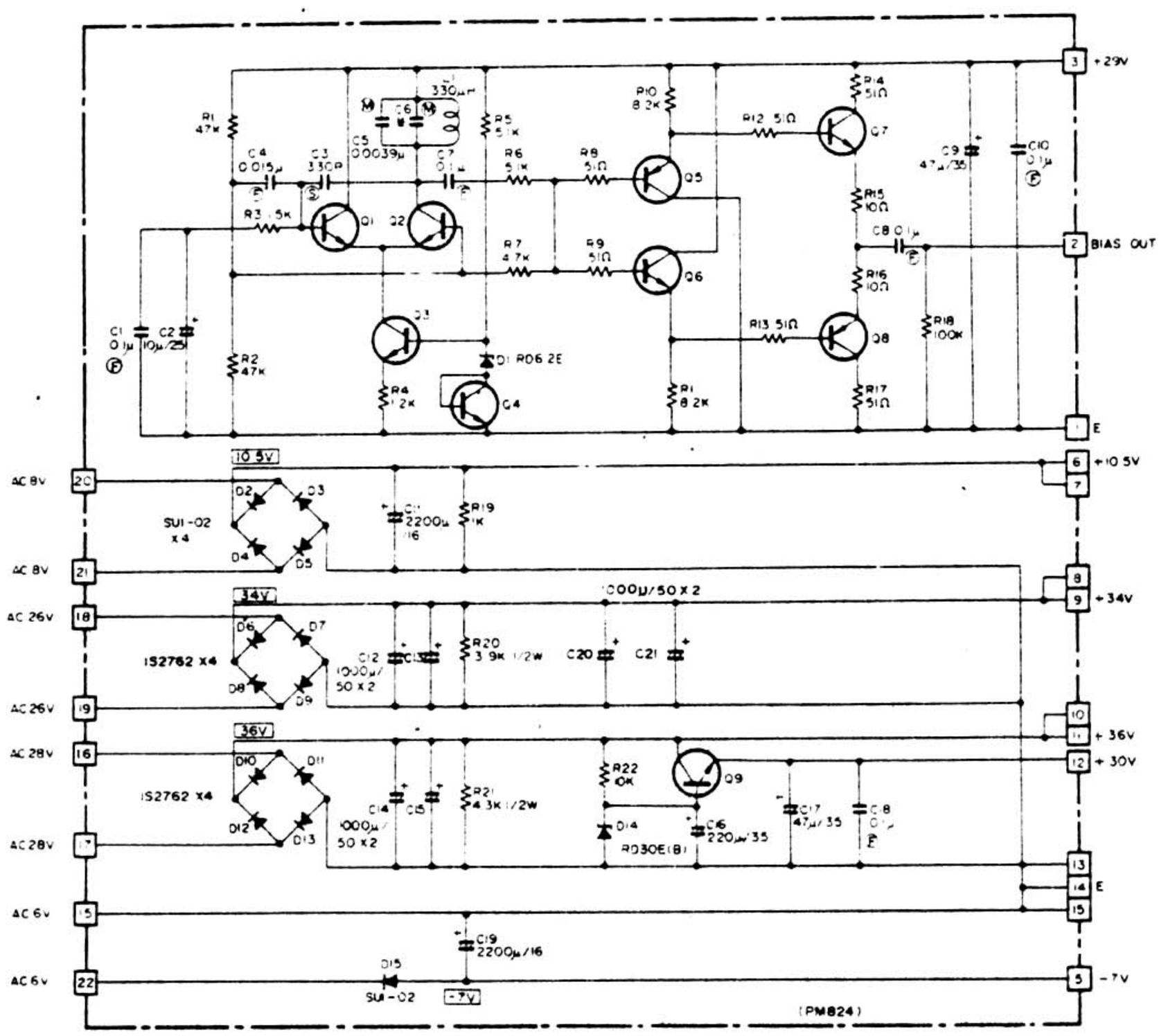

NOTES 1. [ ] : ON PRINTED CIRCUIT BOARD
2. [1] : TERMINALS
3. UNLESS OTHERWISE INDICATED:
ALL RESISTORS VALUES ARE IN OHM, ¼WATT, 5%.
ALL CAPACITORS VALUES ARE IN FARADS, 10%.
4. LETTER SYMBOLS ARE FOLLOWS:
Ⓕ : MYLAR FILM CAPACITOR
Ⓜ : MICA CAPACITOR
Ⓢ : POLYSTYREN CAPACITOR

5. TRANSISTORS ARE FOLLOWS:
Q1,2,3,4,6,7 : 2SC945 Ⓛ or 2SC828A
Q5,8 : 2SC733 or 2SA564A
Q9 : 2SC1318 or 2SD571
6. C20 AND C21 ARE USED ON MODEL 8SD ONLY

MASTER OSCILLATOR AND POWER SUPPLY P.C.B. Ass'y PA-315 (PM-824)

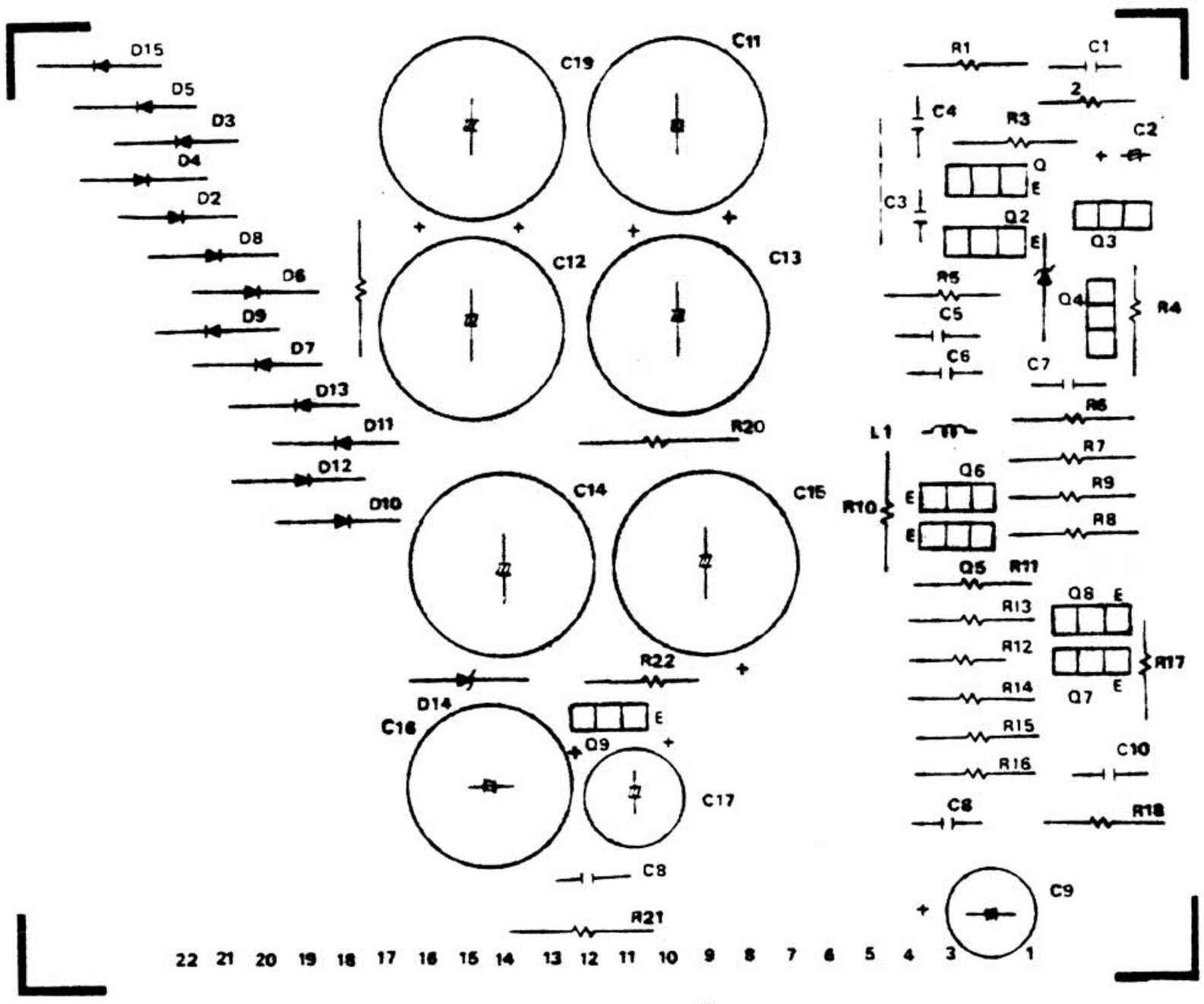

MX-5050 2S D2 HEAD ASSEMBLY (PA-387)

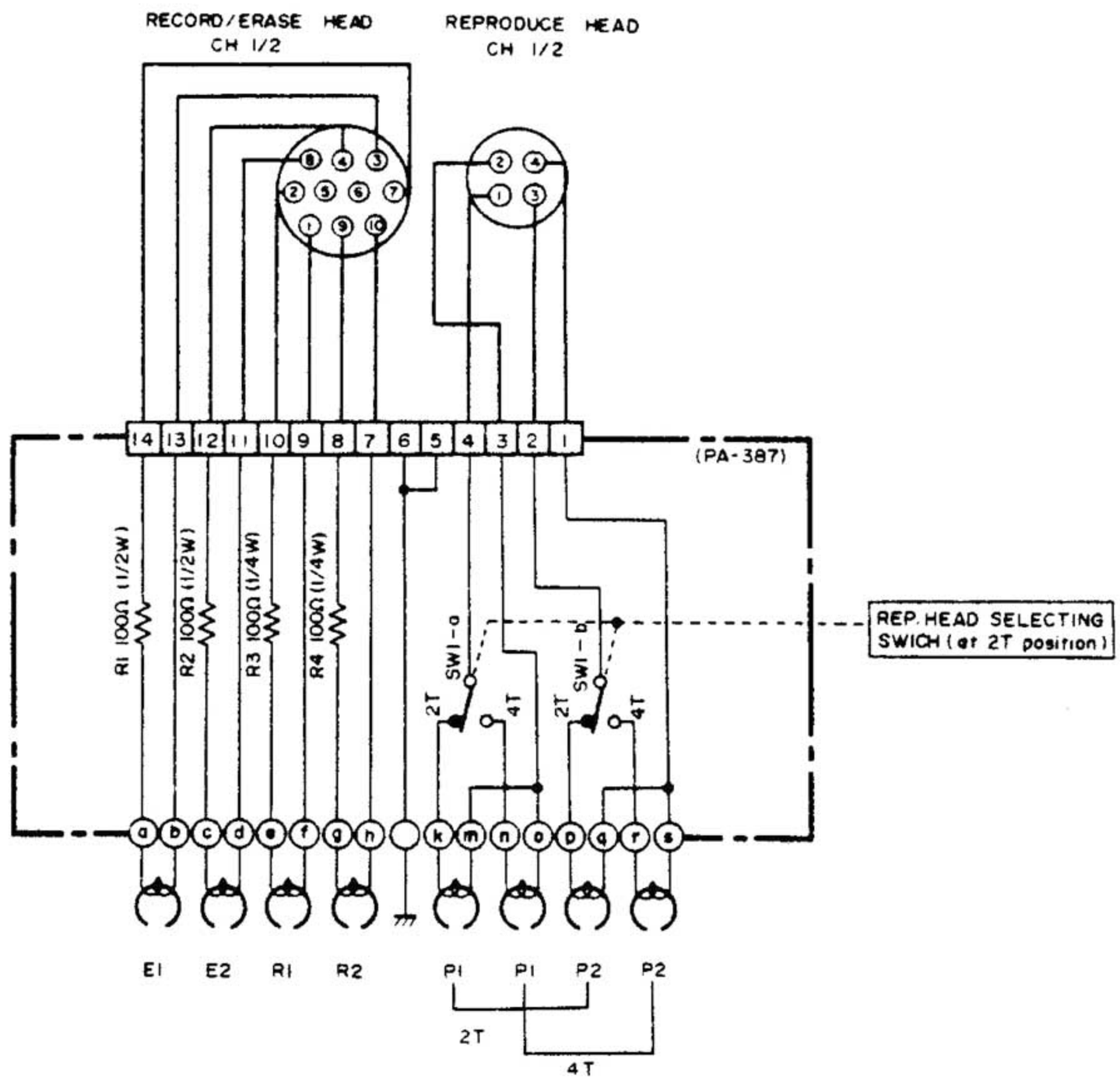

MX-5050 2SD2 HEAD P. C. B. Ass'y PA-387 (PM-887)

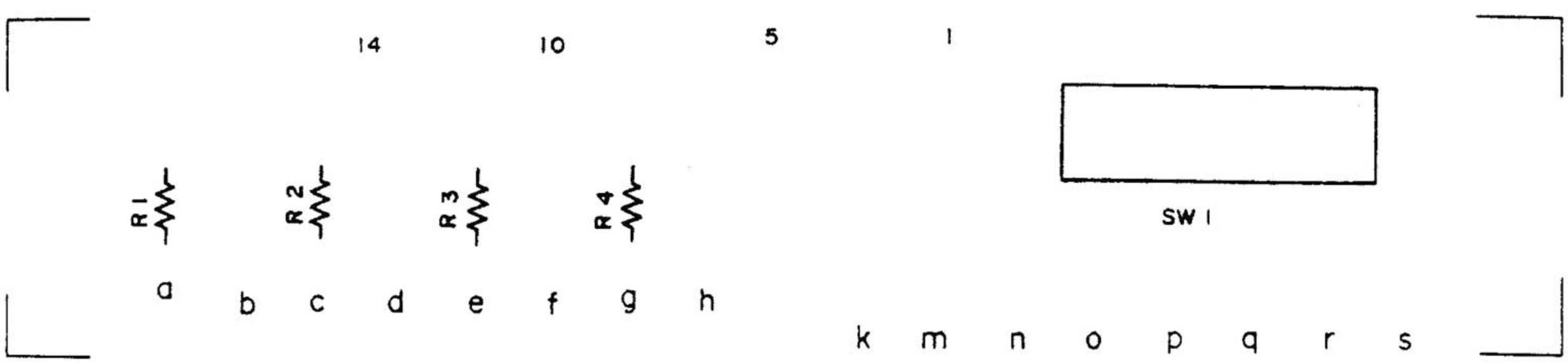

MX-5050 1/2QXD, QXD HEAD ASSEMBLY (PA-386)

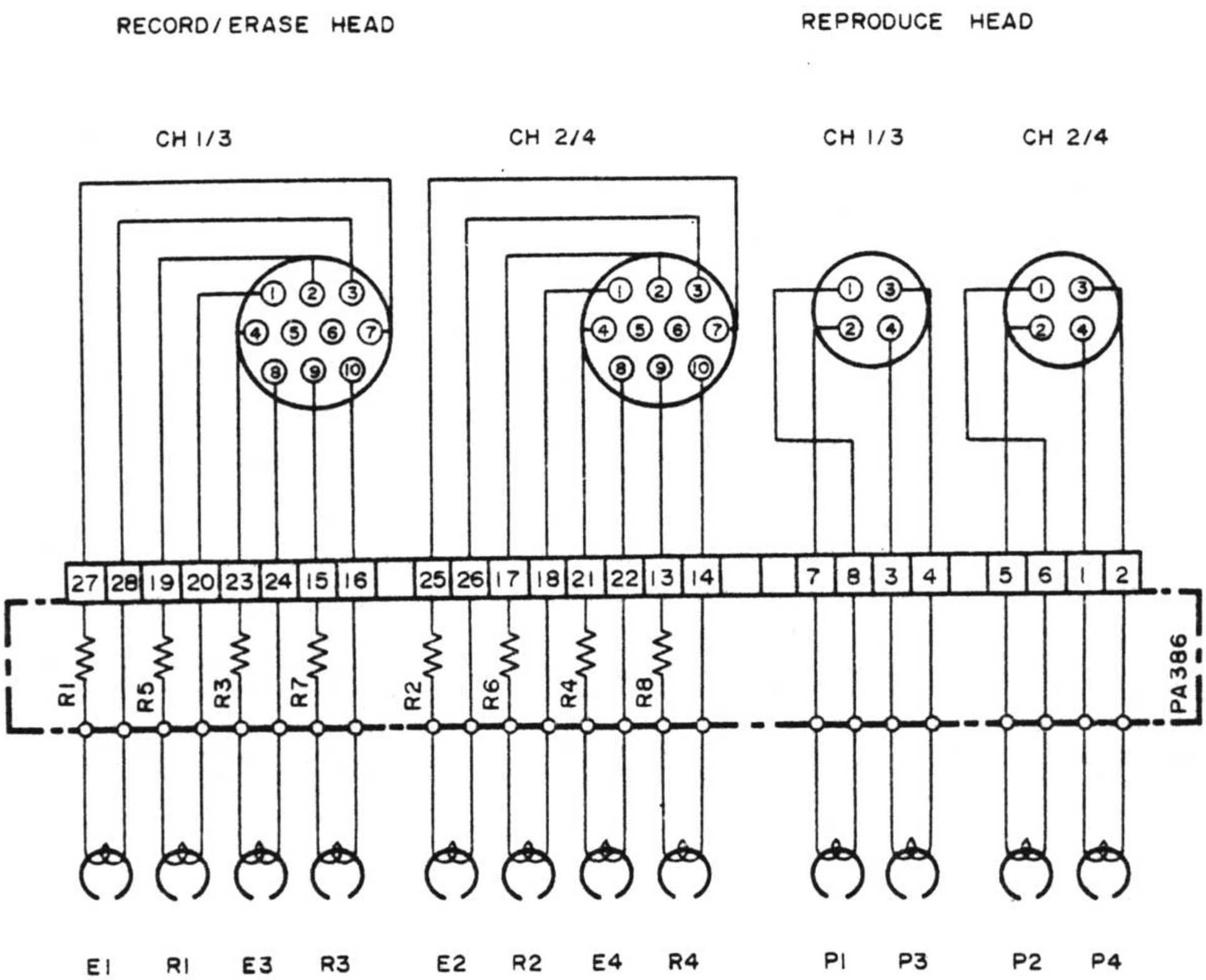

R1 ~ 4	100Ω	1/2 W
R5 ~ 8	100Ω	1/4 W

MX-5050 QXD HEAD P. C. B. Ass'y PA-386 (PM-886)

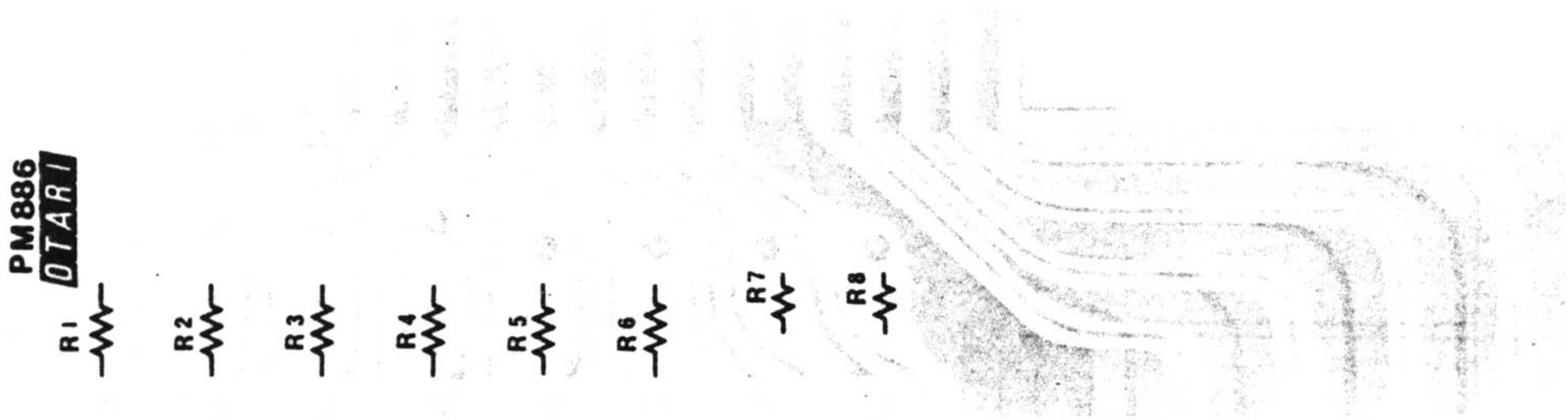

MX-5050 8SD HEAD ASSEMBLY

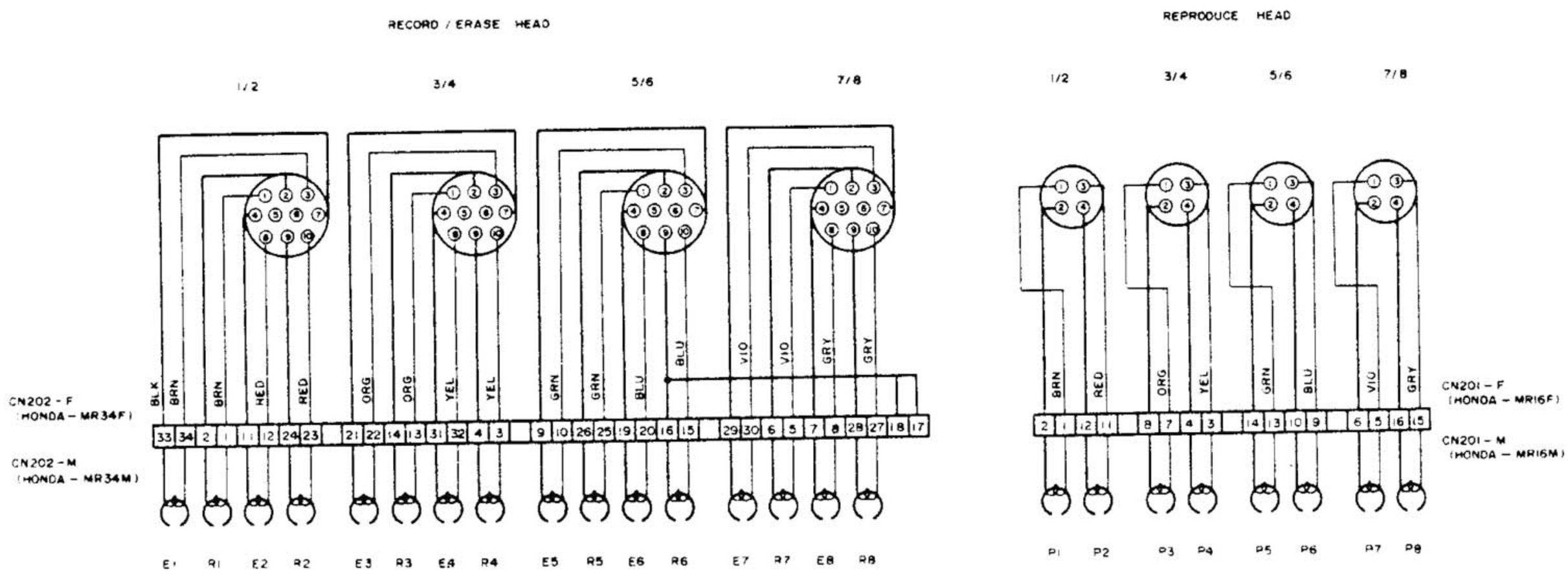

NOTE: ——— not
——— cold or shield

CAPSTAN SERVO MOTER POWER SUPPLY P.C.B. PA-377 (PM-875A)

Refer to TAPE TRANSPORT ELECTRONICS WIRING DIAGRAM.

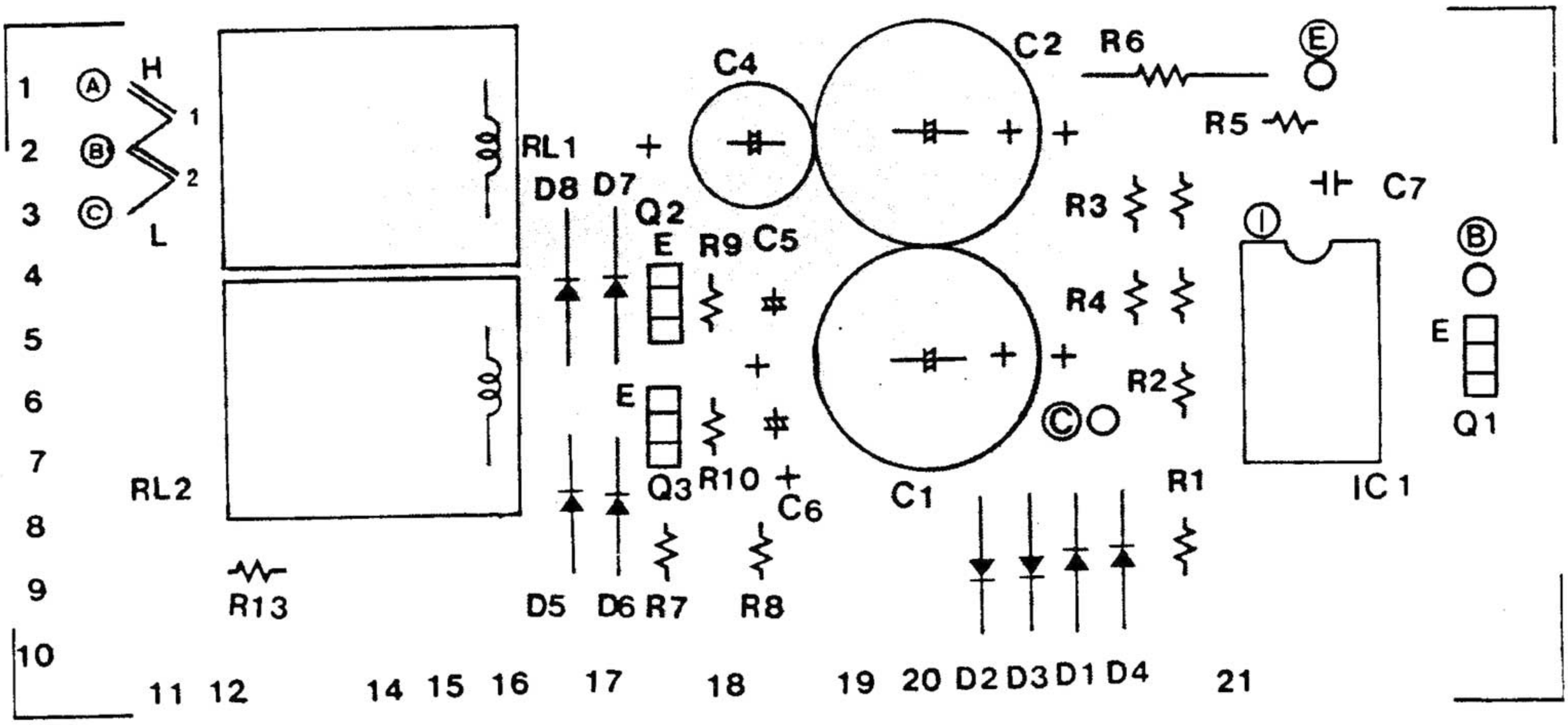

POWER SWITCH P.C.B. Ass'y PA-378 (PM-833A)

Refer to TAPE TRANSPORT ELECTRONICS WIRING DIAGRAM.

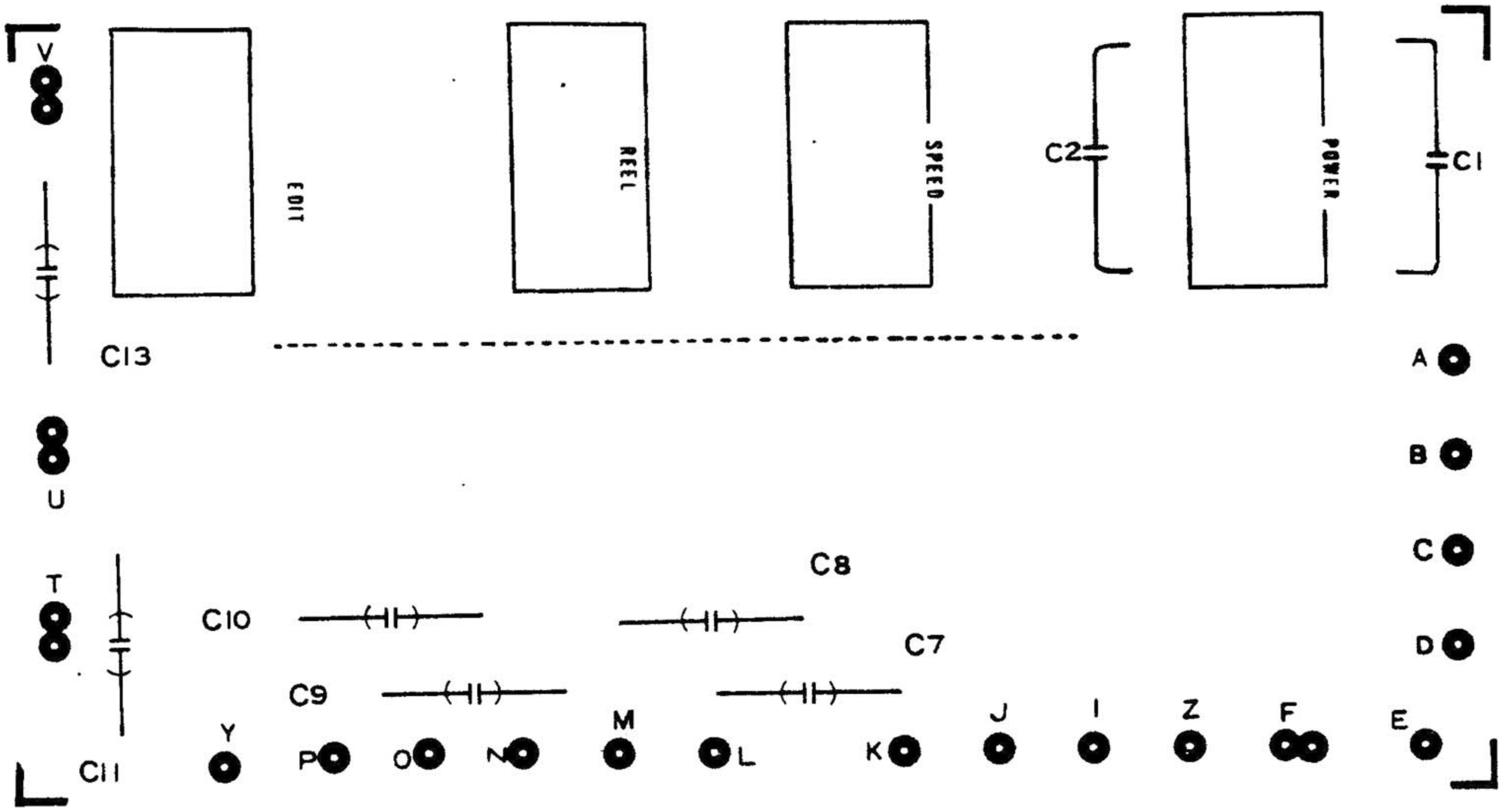

TRANSPORT MOTHER P.C.B. Ass'y PA-314 (PM-823A)

Refer to TAPE TRANSPORT ELECTRONICS WIRING DIAGRAM.

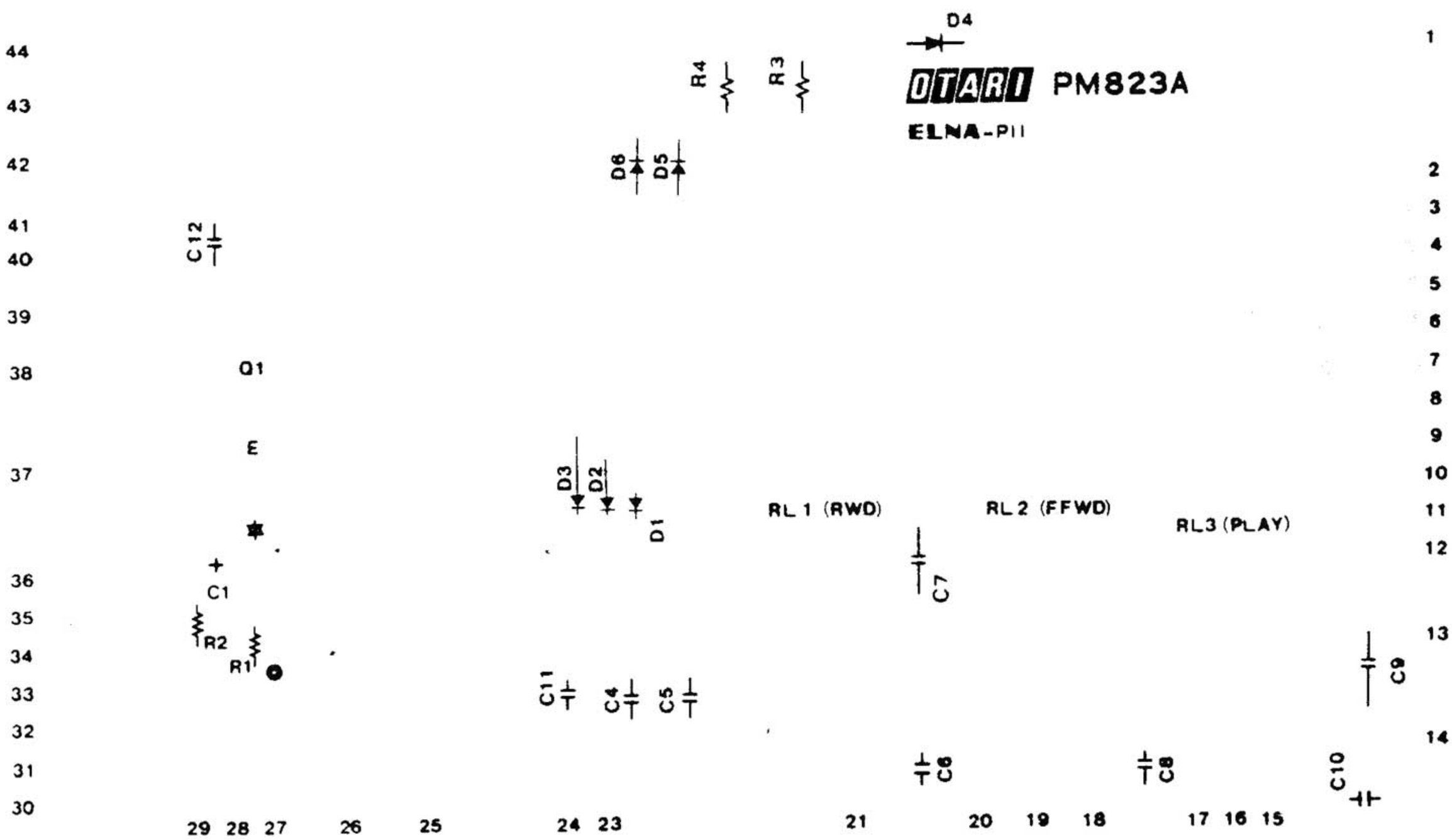

MX-5050 2SD2,QXD,1/2QXD,8SD RECORD REPRODUCE ELECTRONICS (AF-237)

WIRING DIAGRAM

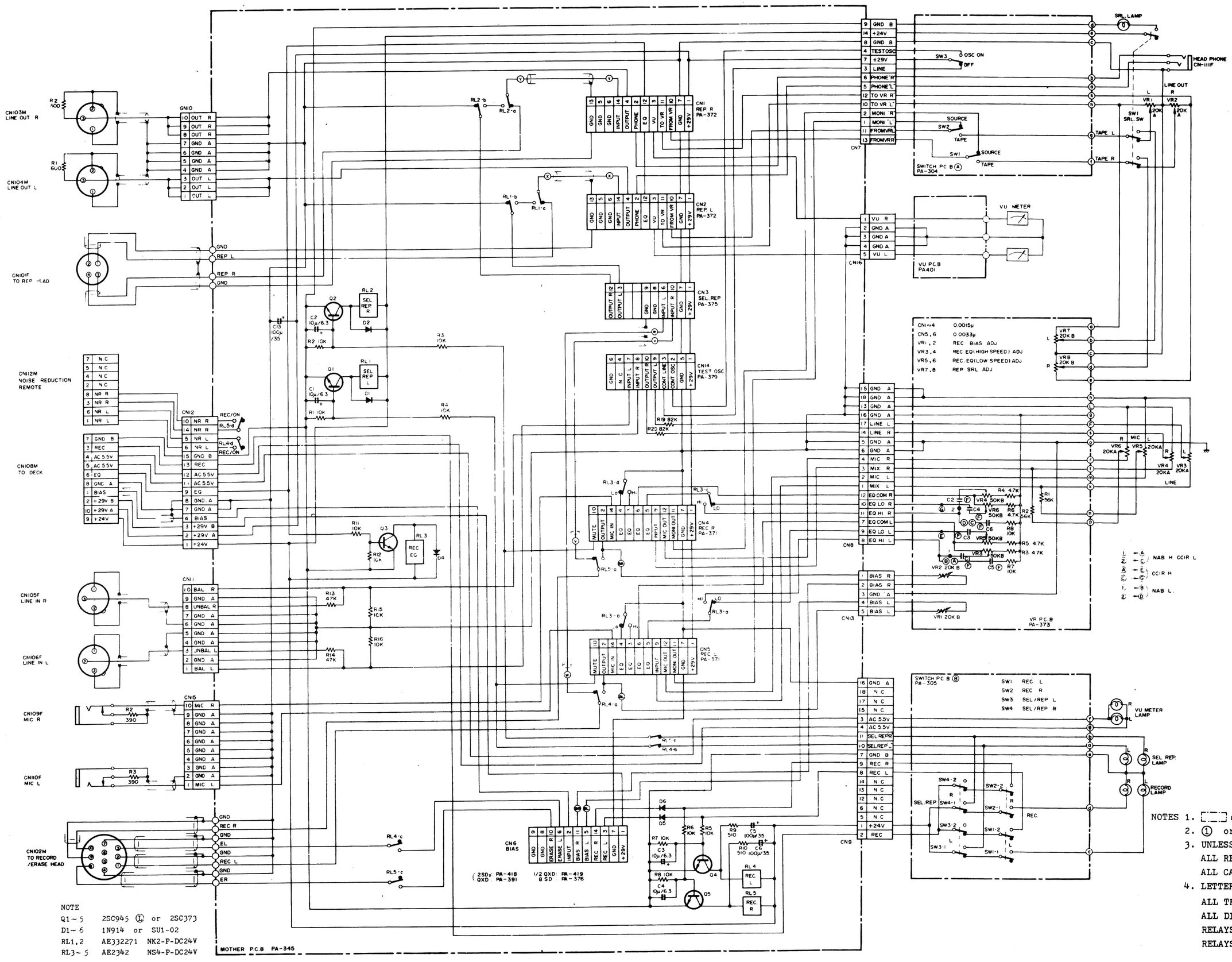

NOTE

Q1~5	2SC945 Ⓛ or	2SC373
D1~6	1N914 or	SU1-02
RL1,2	AE332271	NK2-P-DC24V
RL3~5	AE2342	NS4-P-DC24V

NOTES 1. [ ] : ON PRINTED CIRCUIT BOARD
2. ① or 1 : TERMINALS
3. UNLESS OTHERWISE INDICATED:
ALL RESISTORS VALUES ARE IN OHM, ¼WATT
ALL CAPACITORS VALUES ARE IN FARADS, 1
4. LETTER SYMBOL F IS MYLOR FILM CAPACIT
ALL TRANSISTORS ARE 2SC945 L OR 2SC37
ALL DIODES ARE 1N914 OR SU1-02
RELAYS 1 AND 2 ARE AE332271 NK2-P-DC24
RELAYS 3 to 5 ARE AE2342 NS4-p-DC24V

MX-5050 2SD2,QXD,1/2QXD,8SD TAPE TRANSPORT ELECTRONICS (TD-5250D)

WIRING DIAGRAM

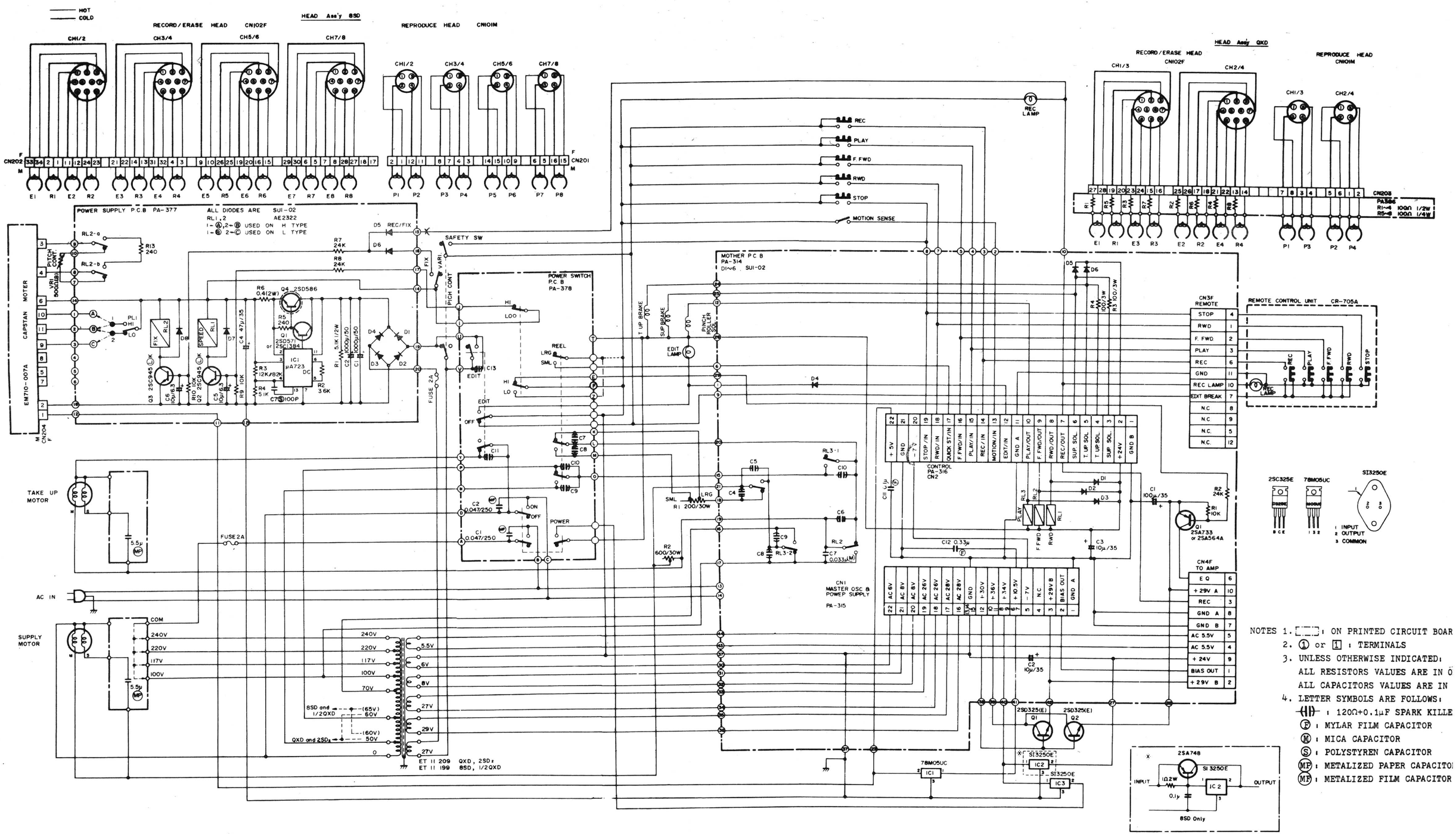

NOTES 1. ▭ : ON PRINTED CIRCUIT BOAR
2. ① or 1 : TERMINALS
3. UNLESS OTHERWISE INDICATED:
ALL RESISTORS VALUES ARE IN Ω
ALL CAPACITORS VALUES ARE IN
4. LETTER SYMBOLS ARE FOLLOWS:
⊣⊢ : 120Ω+0.1μF SPARK KILLE
Ⓕ : MYLAR FILM CAPACITOR
Ⓜ : MICA CAPACITOR
Ⓢ : POLYSTYREN CAPACITOR
Ⓜ̲P : METALIZED PAPER CAPACITO
Ⓜ̲F : METALIZED FILM CAPACITOR