Parts No.0S3-031

OTARI®

1/4" 4 TRACK

MX-5050 BQ II

PROFESSIONAL RECORDER

INSTRUCTION AND MAINTENANCE MANUAL



Edition No.2

Issued:November 1983

CAUTION

To prevent fire or shock hazard:

Do not expose this appliance to rain or moisture.

Do not remove back.

No user-serviceable parts inside.

Refer servicing to qualified service personnel.

SAFETY INSTRUCTIONS

1. Read Instructions -- All the safety and operating instructions should be read before the appliance is operated.
2. Retain Instructions -- The safety and operating instructions should be retained for future reference.
3. Heed Warnings -- All warnings on the appliance and in the operating instructions should be adhered to.
4. Follow Instructions -- All operating and use instructions should be followed.
5. Water and Moisture -- The appliance should not be used near water - for example, near a bathtub, washbowl, kitchen sink, laundrytub, in a wet basement, or near a swimming pool, etc.
6. Carts and Stands -- The appliance should be used only with a cart or stand that is recommended by the manufacturer.
7. Ventilation -- The appliance should be situated so that its location or position does not interfere with its proper ventilation.
   For example, the appliance should not be situated on a bed, sofa, rug, or similar surface that may block the ventilation openings; or, placed in a built-in installation, such as a bookcase or cabinet that may impede the flow of air through the ventilation openings.
8. Heat -- The appliance should be situated away from heat sources such as radiators, heat registers, stoves, or other appliances (including amplifiers) that produce heat.
9. Power Sources -- The appliance should be connected to a power supply only of the type described in the operating instructions or as marked on the appliance.
10. Grounding or Polarization -- The precautions that should be taken so that the grounding or polarization means of an appliance is not defeated.
11. Power-Cord Protection -- Power-supply cords should be routed so that they are not likely to be walked on pinched by items placed upon or against them, paying particular attention to cords at plugs, convenience receptacles, and the point where they exit from the appliance.
12. Cleaning -- The appliance should be cleaned only as recommended by the manufacturer.
13. Nonuse periods -- The power cord of the appliance should be unplugged from the outlet when left unused for a long period of time.
14. Object and Liquid Entry -- Care should be taken so that objects do not fall and liquids are spilled into the enclosure through openings.
15. Damage Requiring Service -- The appliance should be serviced by qualified service personnel when:
    A. The power-supply cord or the plug has been damaged; or
    B. Objects have fallen, or liquid has been spilled into the appliance; or
    C. The appliance has been exposed to rain; or
    D. The appliance does not appear to operate normally or exhibits marked change in performance; or
16. Servicing -- The user should not attempt to service the appliance beyond that described in the operating instructions.
    All other servicing should be referred to qualified service personnel.

MX-5050 BQ II
PROFESSIONAL TAPE RECORDER

INTRODUCTION

This manual provides descriptive information, installation, operation, maintenance and normal adjustment instructions for the Otari MX-5050 BQ II Professional Tape Recorder.



MX-5050 BQ II Recorder

COMMUNICATION WITH OTARI
FOR SERVICE INFORMATION AND PARTS

The OTARI PRODUCTS are manufactured under strict quality control and each unit is carefully tested and inspected prior to shipment from our factory.

If, however, some adjustments or technical support become necessary, replacement parts are required, or technical questions arise, please contact your nearest Otari dealer or write to:

OTARI ELECTRIC CO., LTD.

4-29-18, Minami Ogikubo,
Suginamiku, Tokyo, 167, Japan
Phone: (03) 333-9631
Telex: J26604 OTRDENKI

OTARI CORPORATION

2 Davis Drive, Belmont
California 94002, U.S.A.
Phone: (415) 592-8311
Telex: 25 9103764890

OTARI ELECTRIC DEUTSCHLAND GmbH.

Gielenstrasse 9,
4040 Neuss 1
F.R. Germany
Phone: 02101-274011
Telex: 41 8517691 OTEL D

OTARI SINGAPORE PTE., LTD.

Unit 5350, 2nd floor, Woh Hup
Complex, 5001, Beach Road,
Singapore, 0719
Phone: 294-5370
Telex: 87 36935 RS36935 OTARI

OTARI ELECTRIC (UK) LTD.

Herschel Industrial Centre, Church Street,
Slough SL1 1EL Berkshire, United Kingdom
Phone: (0753) 38261-2
Telex: 849453 OTARI G

Another part of Otari's continuous technical support program for our products, is the continuous revision of manuals as the equipment is improved or modified.

In order for you to receive our information and service applicable to your requirements, and for the technical support to function properly, please include the following information, most of which can be obtained from the name plate on the equipment in all correspondences.

1. Model Number
2. Serial Number
3. Date of purchase
4. Name and address of dealer from whom machine was purchased
5. Power requirements (voltage and frequency) of the machine
6. Manual number to which you are referring

TABLE OF CONTENTS

Section	Title	Page
1	GENERAL INFORMATION	
1-1	System Description	1-1
1-1-(1)	Tape Transport	1-2
1-1-(2)	Record/Reproduce Electronics	1-4
1-2	Standard Accessories	1-5
1-3	Optional Accessories	1-5
1-4	Specifications	1-6
2	INSTALLATION	
2-1	Unpacking and Inspection	2-1
2-2	Location and Environment	2-1
2-3	Dimensions	2-3
2-4	Operating Position	2-4
2-5	Standard Switch Position on Shipment	2-5
2-6	Power and Signal Connections	2-6
2-6-(1)	AC Power Connection	2-8
2-6-(2)	Signal Connections	2-8
3	OPERATION	
3-1	Controls and Indicators	3-1
3-2	Operating Information	3-12
3-2-(1)	Using the Reel Hold Down Knobs	3-12
3-2-(2)	Pre-Operating Procedure	3-13
3-2-(3)	Reproduction	3-15
3-2-(4)	Normal Recording	3-15
3-2-(5)	Recording with Selective Reproduction	3-17
3-2-(6)	Fast Winding	3-18
3-2-(7)	Editing and Splicing Tape	3-19
4	GENERAL INFORMATION OF MAINTENANCE	
4-1	Test and Maintenance Equipment Requirements	4-1

CONTENTS

5	ROUTINE MAINTENANCE AND CONVERSION INFORMATION	
5-1	Routine Maintenance	5-1
5-1-(1)	Cleaning	5-1
5-1-(2)	Demagnetizing	5-3
5-1-(3)	Lubrication	5-4
5-2	Tape Replacement	5-6
5-3	Equalizer Change	5-6
5-4	Line Voltage Conversion	5-7
5-5	Fuse Replacement	5-7
6	TAPE TRANSPORT MAINTENANCE	
6-1	Transport Access	6-1
6-2	Brake Adjustment	6-2
6-3	Capstan Pinch Roller Pressure Adjustment	6-5
6-4	Tape Speed Adjustment	6-7
6-5	Tape Transport Timing Chart	6-8
6-6	Recording Process Timing Chart	6-9
7	PERFORMANCE TESTING AND ELECTRONIC ALIGNMENT	
7-1	General Notice	7-1
7-2	Test Tapes	7-1
7-3	Test Conditions	7-3
7-4	Performance Tests	7-3
7-4-(1)	Overall Signal-to-Noise	7-4
7-4-(2)	Overall Distortion Test	7-5
7-4-(3)	Crosstalk Test	7-7
7-4-(4)	Erasure Test	7-7
7-4-(5)	Tape Speed Measurement	7-8
7-4-(6)	Flutter and Wow Test	7-10
7-5	Access to Electronics Assembly	7-12
7-6	Electronic Alignment	7-13
7-6-(1)	Reproduce System	7-13
7-6-(2)	Reproduce Head Azimuth Adjustment	7-15
7-6-(3)	Frequency Response	7-16
7-6-(4)	SRL (Repro Level) Adjustment	7-18
7-6-(5)	SEL/REP. Level Adjustment	7-18
7-6-(6)	Record System	7-18

7-6-(7)	Record Head Azimuth Adjustment	7-18
7-6-(8)	Record Bias Adjustment	7-19
7-6-(9)	Overall Frequency Response	7-23
7-6-(10)	Monitor Input Level and VU Meter Level Adjustment	7-24
7-6-(11)	Test Osc Level Adjustment	7-25
7-6-(12)	Recod Level Adjustment	7-26
7-6-(13)	Peak Indicator Trigger Level Adjustment	7-26
8	MAJOR COMPONENT REPLACEMENT	
8-1	Reel Motor Assembly Replacement	8-1
8-1-(1)	Reel Table Replacement and Height Adjustment	8-1
8-1-(2)	Reel Motor Replacement	8-2
8-1-(3)	Brake Arm Assembly and Brake Solenoid Replacement	8-3
8-2	Power Transformer Replacement	8-4
8-3	Capstan Motor Replacement	8-4
8-4	Pinch Roller Replacement	8-5
8-5	Head Assembly Replacement	8-6
8-5-(1)	Description	8-6
8-5-(2)	Head Stack Replacement	8-7
8-5-(3)	Record and Reproduce Head Adjustment	8-9
8-5-(4)	Erase Head Alignment	8-9
9	TROUBLESHOOTING	
9-1	Preliminary Procedures	9-1
9-2	Troubleshooting Hints	9-1
10	PARTS LISTS AND SCHEMATICS	
10-1	Safety Component	10-2
10-2	Assembly Hardware Coding	10-3
10-3	Parts Lists and Exploded View	10-4
10-4	Pin Identification	10-30

CONTENTS

LIST OF ILLUSTRATIONS AND TABLES

Figure	Title	Page
1-1	MX-5050 BQ II Major Components	1-3
2-1	Dimensions	2-3
2-2	Operating Position	2-4
2-3	MIC ATT	2-5
2-4	Adjusting Panel	2-5
2-5	Input/Output Assembly Connector Wiring	2-9
3-1	Reel Hold Down Knob	3-13
3-2	Tape Threading	3-14
3-3	Tape Splicing Block	3-20
5-1	Lifting the Head Cover	5-2
5-2	Demagnetizing	5-4
5-3	Lubrication	5-5
5-4	Voltage Selection Terminal	5-7
5-5	Main Power Fuse Location	5-8
5-6	Internal Fuse Location	5-9
5-7	Rotating Control P.C.B.	5-10
6-1	Tape Transport Access	6-1
6-2	Brake Measurement	6-4
6-3	Brake Assembly Location	6-4
6-4	Pinch Roller Pressure Measurement	6-6
6-5	Pinch Roller Pressure Adjustment	6-6
6-6	Capstan Servo Control P.C.B.	6-7
6-7	Control Timing Chart	6-8
6-8	Recording Process Timing Chart	6-9
7-1	Filter Schematics	7-4
7-2	Test Tape Loading	7-9
7-3	Electronics Access	7-13
7-4	Reproduce System Block and Level Diagram	7-14
7-5	Head Assembly	7-15
7-6	Location of Record/Reproduce Electronics	7-17
7-7	Overall Frequency Response	7-20
7-8	Record System Block and Level Diagram	7-21

Figure	Title	Page
7-9	Bias Current v.s. Output and Distortion	7-21
7-10	Input v.s. Output and Distortion	7-22
7-11	Location of Record/Reproduce Electronics	7-22
7-12	Location of AMP. Control Electronics	7-25
8-1	Reel Motor Mounting	8-1
8-2	Brake Assembly	8-2
8-3	Location of DC Servo Capstan Motor	8-5
8-4	Pinch Roller Removal	8-6
8-5	Head Assembly	8-8
8-6	Head Alignment	8-8

Table	Title	Page
1-1	Standard Accessories	1-5
1-2	Optional Accessories	1-5
1-3	Specifications	1-6
2-1	Standard Switch Position on Shipment	2-5
2-2	Rear Connector Panel	2-6
3-1	Tape Transport Controls and Indicators	3-1
3-2	Record/Reproduce Electronics Controls and Indicators	3-7
4-1	Test and Maintenance Equipment	4-1
4-2	Flutter Test Tapes	4-2
4-3	Reproduce Alignment Test Tape	4-2
5-1	Record Level	5-6
5-2	Fuse Information	5-9
6-1	Braking Force Specifications	6-3
7-1	Signal-to-Noise Specifications	7-5
7-2	Flutter and Wow Specification	7-11
7-3	Equalizer Time Constants & Fluxivity	7-17
7-4	Standard Level	7-25
9-1	Troubleshooting Hints for Amplifiers	9-2
9-2	Troubleshooting Hints for Transport	9-2
10-1	Safety Component	10-2

SECTION 1
GENERAL INFORMATION

The MX-5050 BQ Ⅱ Recorder is a professional quality two-speed audio tape recorder/reproducer, designed for optimum performance and long life.
It accommodates a 1/4-inch wide tape and two 7 1/2 ips (19.05 cm/sec.) and 15 ips (38.1 cm/sec.) tape speeds.

1-1 SYSTEM DESCRIPTION

Among the many professional features of the MX-5050 BQ Ⅱ are: selective reproduction (SEL/REP), automatic motion sensing control by a proprietary microprocessor, an edit control that permits tape spilling, dynamic braking, an electronic tape timer, an adjustable cueing control for audible monitoring in fast forward and rewind, a dual frequency built-in test and cue-tone oscillator, adjustable record bias, equalization and level controls, XLR type connectors for input and output lines, separate line and microphone input level controls for each channel, a VU meter with a peak indicator for each channel, selecting switches for input and output levels, and a memory stop for automatically stopping the tape at a desired position except in record mode.

1-1-(1) TAPE TRANSPORT

All components of the tape transport system are mounted on a rigid aluminium base for stability.
The transport design incorporates two 6-pole induction motors for the tape reels and a dc servo motor (Direct drive) for the capstan.
A pitch control is available to adjust the control range of the tape speed within ±7% of the nominal speed for sound application.

The transport accommodates tape reels of 10 1/2 inches, 8 inches, 7 inches, and 5 inches in diameter in NAB or EIA hub configurations.
In addition to the editing controls, a tape-splicing block (Figure 3-3) mounted on the head cover holds the tape for easy editing, cutting, and applying splicing tape.
Momentary contact pushbutton switches on the transport are used to select operational modes: record, play, stop, rewind, fast forward, and edit.
These modes except edit mode can be controlled from a remote location by using an optional remote control unit.

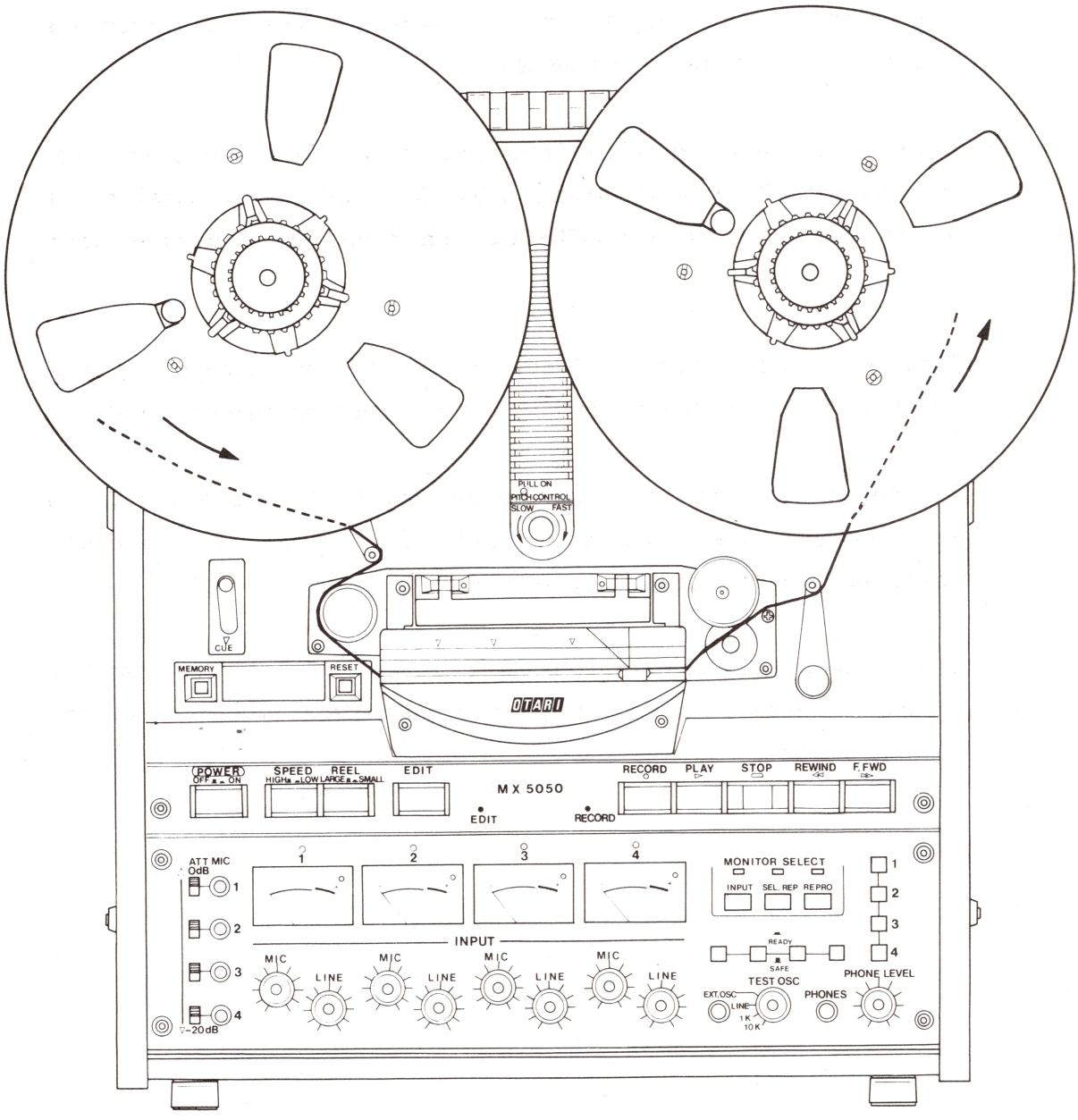

Figure 1-1 MX-5050 BQ II Major components

1-1-(2) RECORD/REPRODUCE ELECTRONICS

FEATURES

(1) The RECORD/REPRODUCE amplifier unit is interconnected to the transport unit by just the connectors, and the internal components and the adjustment controls are accessible from the front to facilitate maintenance.

(2) Available sound applications are a SEL/REP. function for overdubbing: SOUND WITH SOUND, SOUND ON SOUND, etc , carried out by the PUNCH-IN and PUNCH-OUT functions of the transport control.

(3) Both input and output level select switches are provided on the printed circuit board to select either input or output level.

(4) For optimum performance corresponding to the tape used, the Record bias, level, and equalizer controls can be accurately adjusted from the adjusting panel.

(5) Low frequency compensation controls are provided for possible accurate alignment of low frequency characteristics to meet the tape to be used.

1-2 STANDARD ACCESSORIES

The MX-5050 BQⅡ is supplied with the standard accessories listed in Table 1-1.

Table 1-1 Standard Accessories

Description	Quantity	Otari Part Number
Power Cord	1	PZ4D003
NAB Hub Reel Hold Down Knob (10 1/2'')	2	KWOHA
NAB Empty Reel (10 1/2'')	1	ZA-51A
Reel Adjusting Disc (Shim)*	2	KWOC005
Instruction & Maintenance Manual	1	OS3-031

* The Reel Adjusting Disc (Shim) is placed between a metal reel and the reel table to compensate for the difference in thickness between metal reels and plastic reels.

1-3 OPTIONAL ACCESSORIES

Available optional accessories are listed in Table 1-2.

Table 1-2 Optional Accessories

Description	Otari Part Number
Remote Control Unit	CB-102
EIA Hub Reel Hold Down Knob [7'']	ZA-52Y
DIN Hub Reel Hold Down Knob Ass'y	ZA-52Z
Cleaning Kit	ZA-51B
Tape Deck Pedestal	ZA-52L
Extension Board Ass'y	PB-77X

1-4 SPECIFICATIONS

The specifications of the MX-5050 BQII are as listed in Table 1-3.

Table 1-3 Specifications

Tape Width and Tracks:	1/4 inch (6.3 mm) tape 4 tracks (0.037 inch or 0.94 mm track width)
Tape Speeds:	7 1/2 and 15 ips (19.05 and 38.1cm/sec.) Maximum deviation: ±0.2% measured with 1.5 mil (0.038 mm) tape
Reel Sizes:	5, 7 or 10 1/2 inch plastic or metal, EIA or NAB.
Heads:	Four head stacks: 1/4'' erase x 2 (1-3, 2-4CH) 1/4'' record 1/4'' reproduce
Motors: Capstan:	DC servo controlled motor (Pitch control range ±7%)
Reels:	Two torque motors
Rewind Time:	Approximately 90 seconds for 2,500 ft (760 m) NAB reel
Operating Position:	Vertical or at angle
Power Requirements:	100, 117, 220, 240 volts, 50 or 60 Hz, single phase AC.
Power Consumption	100 watts

Operating Environment:	40° to 104°F (5° to 40°C) 20% to 80% Relative Humidity
Storage Environment:	-5° to 113°F (-20° to 45°C)
Dimensions and Weight:	Dimensions: 438 mm width, 269 mm depth, 527 mm height. 17.3 " width, 10.6" depth, 20.8" height Weight: 27 kg, 60 lbs.
Mounting	Dark leatherette-finished cabinet.
Remote Control Unit:	An optional remote control unit is used to control the record, play, stop, rewind, and fast forward modes. (CB-102)
Connectors:	LINE INPUT, LINE OUTPUT: standard three-pin XLR. MICROPHONE, EXT OSC: standard single-conductor phone jack PHONES: standard two-conductor phone jack
Inputs: LINE:	Minimum -6 or -18 dBm switchable, unbalanced 50 kohm.
MICROPHONE:	Minimum -70 dBm, unbalanced. Applicable microphone impedance: 150 ohm to 1 kohm. The microphone attenuator switch may be set to the 0 or -20 dB position depending on the circumstances.
EXT OSC:	Minimum -18 dBm, unbalanced 10 kohm.

Outputs: LINE:	+4 or -8 dBm switchable, unbalanced. Load impedance: more than 600 ohm. Maximum line output level: +21 dBm with 600 ohm load
Headphone Jack:	-19 dBm with an 8 ohm load Load impedance: 8 ohm or greater
Equalization:	NAB or IEC for 7 1/2 and 15 ips.
Frequency Response:	REC/PLAY 15 ips: 30Hz to 20kHz +2,-3dB 7 1/2 ips: 20Hz to 18 kHz +2,-3dB SEL/REP 15 ips: 50Hz to 15 kHz ±3 dB 7 1/2 ips: 50Hz to 12 kHz ±3 dB Specifications refer to a 1 kHz reference when recorded on 3M #226.

Signal to noise ratio:

Tape speed\EQ.	NAB	IEC
15 ips	53dB	54dB
7 1/2 ips	53dB	54dB

Crosstalk:	greater than 50 dB 1kHz
Wow and Flutter:	NAB weighted: 15 ips: less than 0.06% 7 1/2 ips: less than 0.08%
Distortion:	less than 0.5% at 1 kHz at 250 nWb/m.
Erase Efficiency:	greater than 72 dB.
Test Oscillator Frequency:	Nominal 1 kHz and 10 kHz.
Bias and Erase Frequency:	200 kHz
Peak indicator:	Trigger level: 1040 nWb/m (15 dB above AMPEX operating level) recorded flux level.

Notes:

1. Signal to noise ratio is measured with respect to a recorded level of 1,040 nWb/m.
   Recording level is 250 nWb/m for NAB and 320 nWb/m for IEC.

   Unweighted: Signal to noise ratio is measured by using a 30 Hz to 18 kHz RC filter.
   Weighted: Using and NAB or ASA "A" weighting filter and a 1 kHz reference.

2. Main schematic diagrams are at the end of this manual.

3. OTARI reserves the right to change specifications without notice and/or obligation.

SECTION 2
INSTALLATION

This section of the manual provides information on unpacking and inspection, location and environment, and power and signal connections.

2-1 UNPACKING AND INSPECTION

The MX-5050 BQ II system is shipped from the factory in a single cardboard packing case.
Upon receipt, examine the case for any sign of damage.
Unpack the equipment and inspect for any sign of damage.
Use great care when unpacking the equipment and removing packing materials to prevent damage to critical components such as the capstan, head assembly, and tension arms.

Referring to Table 1-1 and Table 1-2 (as applicable), verify that all items have been received.
Report any shortage or damage to the carrier and your local Otari dealer.
Save the packing case for possible shipment of the equipment to another location or in case of reshipment.
Other packaging may cause damage during transportation and will void the warranty.

Regarding the repacking method, please refer to the illustration which is attached to a flap of the packing box.

2-2 LOCATION AND ENVIRONMENT

The area chosen for operation should be adequately ventilated and dust free.

Since recording is by an electromagnetic process, it is possible that strong electromagnetic fields may affect the system adversely. Common sources of interference are fluctuating loads on nearby high-voltage lines, heavy duty transformers, transmitting equipment, and air conditioners.

It is recommended that the equipment be used in an environment where the surrounding temperature does not exceed limits of 40° to 104°F (5° to 40° C), with the relative humidity between 20 and 80%. Allow at least a 4 inch (approx. 10 cm) clearance behind the rear-panel.

2-3 DIMENSIONS

Dimensions of the MX-5050 BQII are shown in Figure 2-1.

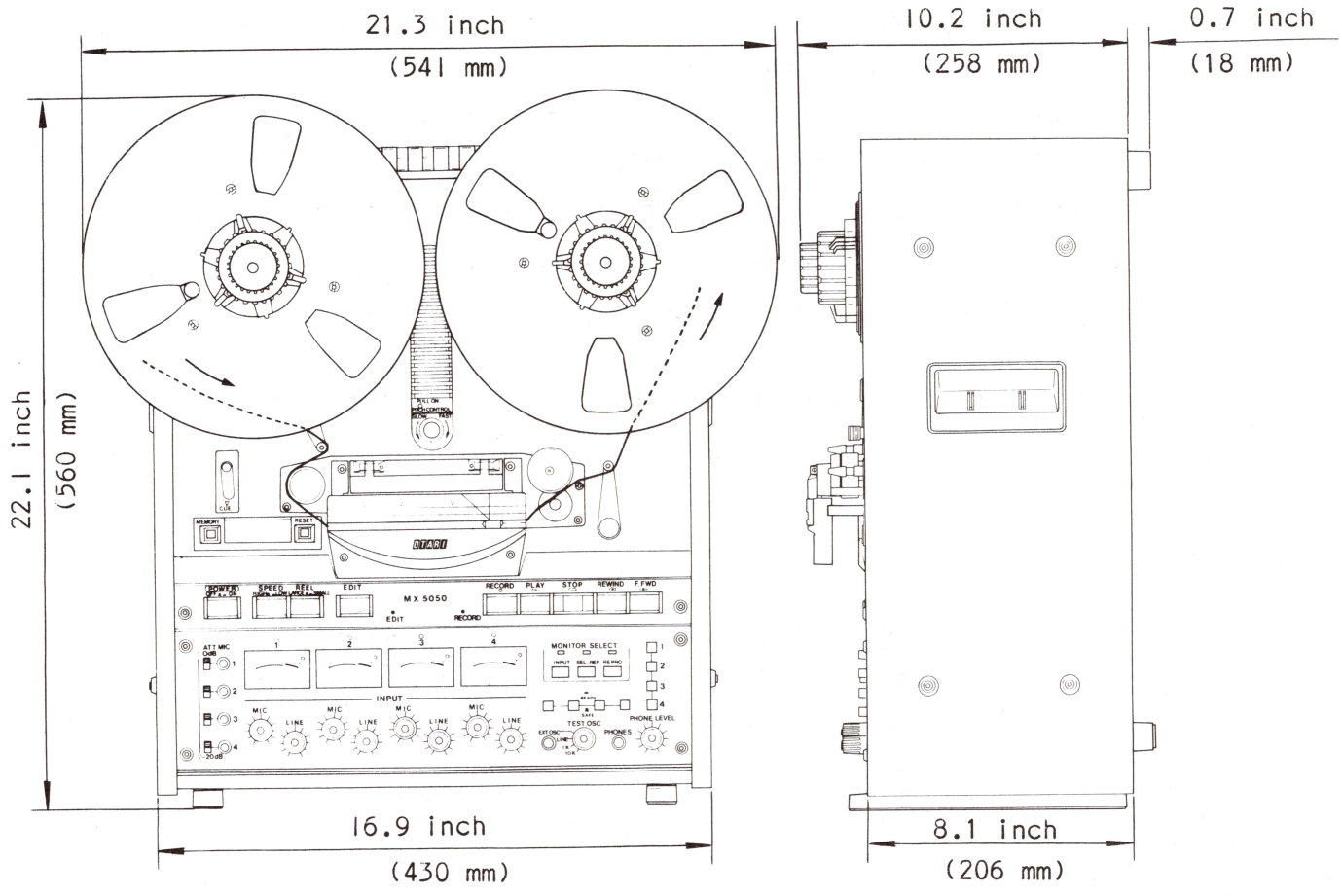

Figure 2-1 Dimensions

2-4 OPERATING POSITION

The MX-5050 BQⅡ can be operated at an angle by using the tape deck stand.

Maximum cooling efficiency is obtained when the unit is set vertically.

Although the MX-5050 BQⅡ can be operated vertically or at an angle by using the tape deck stand, when it is operated vertically, nothing should be placed on the top of the recorder or within 4 inch (approx. 10 cm) of the back to aid ventilation.

The tape deck stand is installed on the rear cover by four screws.

To position the MX-5050 BQⅡ at an angle, press both sides of the tape deck stand as shown in Figure 2-2 and pull out to an angle of 90° to set.

To retract the tape deck stand, proceed in the reverse order.

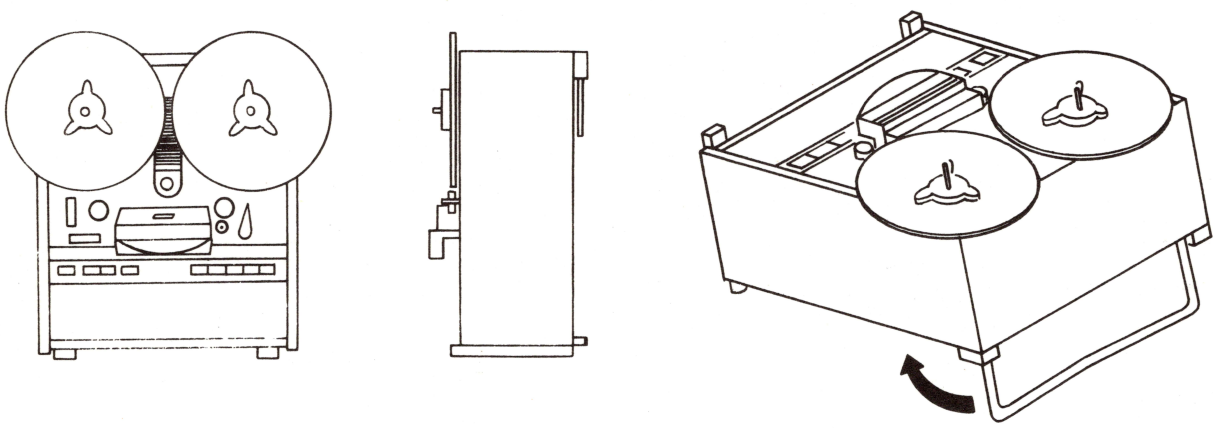

Figure 2-2 Operating Position

2-5 STANDARD SWITCH POSITION ON SHIPMENT

LINE INPUT LEVEL and OUTPUT LEVEL switches are provided on the adjusting panel in the record/reproduce electronics and the MIC attenuator switches are provided on the front panel of the electronics on the MX-5050 BQⅡ.
These switches have been set at the factory at one of two positions as shown in Table 2-1.
Slide the switch to the desired position to change the standard.

Table 2-1. Standard Switch Position on shipment

SWITCH	Ref. No	POSITION
LINE INPUT LEVEL	1	L (minimum -18 dBm)
LINE OUTPUT LEVEL	2	H (+4 dBm)
MIC ATT	3	0dB

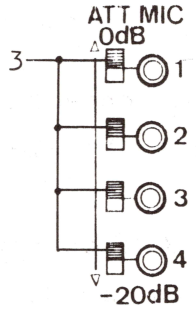

Figure 2-3 MIC ATT

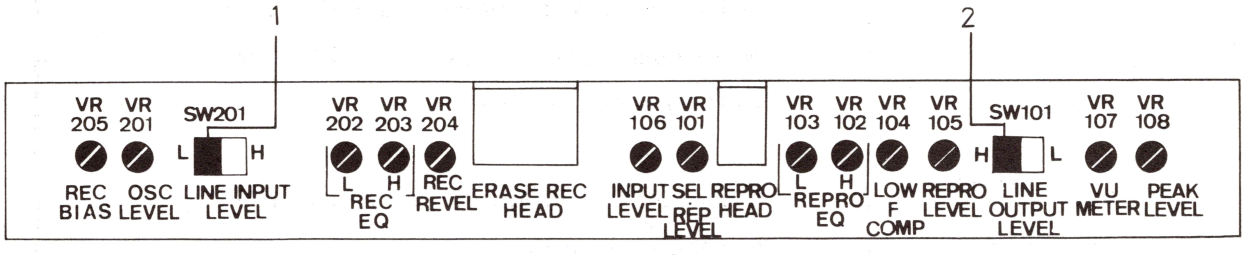

Figure 2-4 Adjusting Panel

2-6 POWER AND SIGNAL CONNECTIONS

Power, auxiliary ground, remote, and line input/output connections are made on the rear connector panel of the MX-5050 BQⅡ.
Table 2-2 shows the function of each connector and component on the rear panel.

Table 2-2 Rear Connector Panel

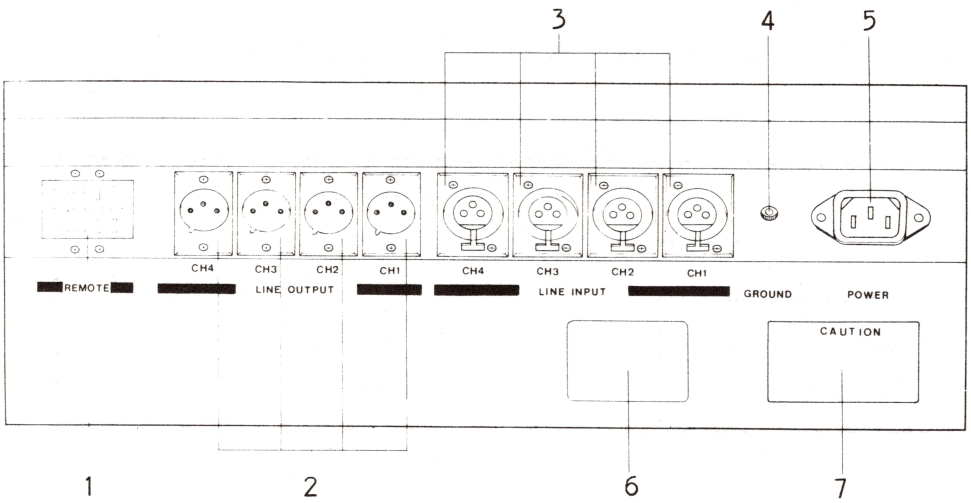

Index No.	Name	Function
1	REMOTE CONTROL connector	Used to connect optional remote control unit (CB-102).
2	LINE OUTPUT connectors	Male XLR connector with un-balanced output. Load impedance : 600 ohm or greater Level : +4 or -8 dBm at 0 VU, selectable with on-board switch Maximum output level : +21 dBm with a 600 ohm load
3	LINE INPUT connectors	Female XLR connector with un-balanced input. Input impedance : 50 kohm Minimum input : -6 dBm or -18 dBm, selectable with on-board switch.

4	GROUND terminal	Auxiliary ground connection for use with equipment not connected to a common ac ground.
5	POWER connector	Three-terminal connector for connection to ac power and ground.
6	PRODUCTION nameplate	Indicates model number, production lot number (serial number), power requirements, and place of manufacture.
7	CAUTION	Precautions for preventing fire and shock.

2-6-(1) AC POWER CONNECTION

The MX-5050 BQⅡ is factory set to operate at the line voltage and frequency indicated on the packing case and on the rear connector panel of the equipment.
AC power is connected by means of a three-wire power cable which also provides a common ground connection.
If a two-wire receptacle is used with an adaptor, be sure the adaptor is properly grounded.

If a change of line voltage is desired to accommodate different power requirements, please contact your nearest Otari dealer.

2-6-(2) SIGNAL CONNECTIONS

Line input (female) and line output (male) connectors are XLR-type connectors.
To wire the mating plugs, refer to Figure 2-5 and proceed as follows.

LINE INPUT CONNECTOR WIRING:

For unbalanced inputs using two-conductor shielded cable, wire the male XLR-connector as follows:

1. Connect the signal leads of a cable to pin 3 (high) and pin 2 (low) of the connector.
2. Connect the cable shield to pin 1 of the connector.
3. Connect a jumper from pin 1 to pin 2 of the connector.

For unbalanced inputs using single-conductor shielded cable, wire the male XLR-connector as follows:

1. Connect the center conductor of the single-conductor shielded cable to pin 3 of the connector.
2. Connect the cable shield to pins 1 and 2.

LINE OUTPUT CONNECTOR WIRING

For unbalanced outputs using two-conductor shielded cable, wire the female XLR-connector as follows:

1. Connect the signal leads of the cable to pin 3 (high) and pin 2 (low) of the connector.
2. Connect the cable shield to pin 1 of the connector.
3. Connect a jumper from pin 1 to pin 2 of the connector.

For unbalanced outputs using single-conductor shielded cable, wire the female XLR-type connector as follows:

1. Connect the center conductor cable to pin 3 of the connector.
2. Connect the cable shield to pin 2 of the connector.
3. Connect a jumper between pins 1 and 2 of the connector.

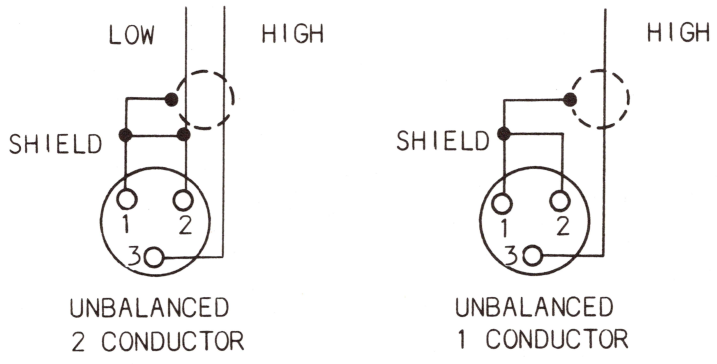

Figure 2-5 Input/Output Assembly Connector Wiring

SECTION 3
OPERATION

This section of the manual provides a description of all operating controls and indicators and their use in the system, and step-by-step procedures for the various modes of operation.

3-1 CONTROLS AND INDICATORS

Table 3-1 Tape Transport Controls and Indicators

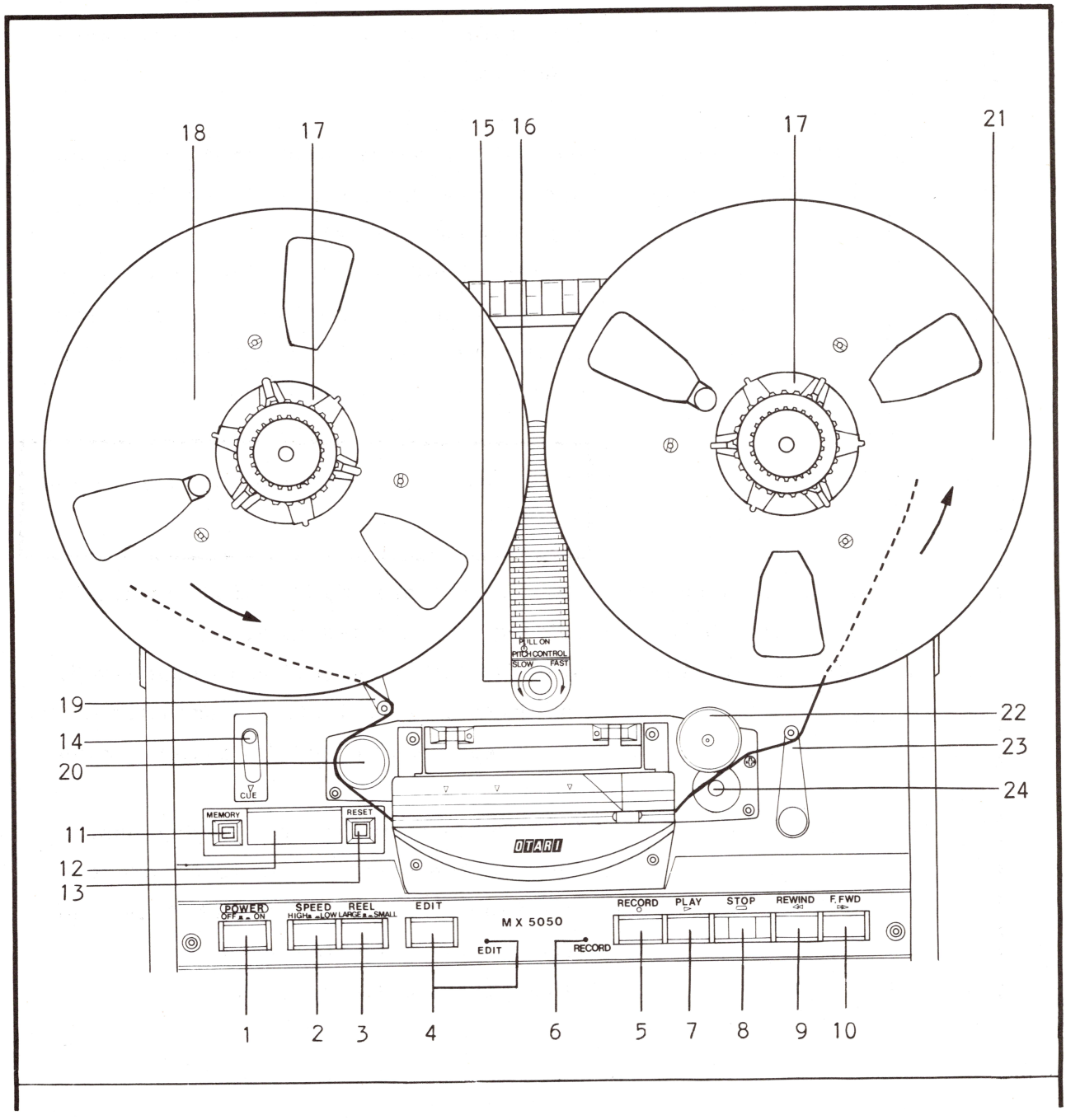

Index No.	Name	Function
1	POWER pushbutton switch	In the depressed position, power is applied to the equipment, and the VU meters illuminate.
2	HIGH/LOW SPEED pushbutton switch	An alternate-action pushbutton switch used to select operating speed. In the HIGH position for 15 ips (38cm/sec) operation, and in the LOW position for 7 1/2 ips (19cm/sec) operation.
3	LARGE/SMALL REEL pushbutton switch	An alternate-action pushbutton switch used to select both reel tensions for the reel hubs diameter. In the LARGE position for reels with NAB hubs (4 1/2 in. diameter hubs), and in the SMALL position for reels with EIA hubs (2 1/4 in. diameter hubs). *The same size reels should be used on both reel tables.*
4	EDIT pushbutton switch and EDIT indicator (green)	Used to initiate the EDIT mode to aid in cutting out unwanted tape. When the EDIT pushbutton is depressed, the green EDIT indicator illuminates and the power is removed from the takeup reel. Then the PLAY pushbutton is depressed, causing the supply reel to rotate and the tape to be spilled off from the takeup side of the transport. Other operations are halted.

Index No.	Name	Function
5	RECORD pushbubbon switch (momentary)	Used in conjunction with the PLAY pushbutton on the transport and the READY/SAFE pushbutton. With the READY/SAFE pushbuttons on the desired channel depressed, simultaneous pressing of the PLAY and RECORD pushbuttons initiates the RECORD mode and the RECORD indicator on the transport illuminates. In the PLAY mode, when the RECORD pushbutton is depressed, the RECORD mode is entered. (called "Punch in"). In the RECORD mode, when the PLAY pushbutton is pressed, the PLAY mode is entered. (called "Punch out"). "Punch in" and "Punch out" are used for overdubbing in conjunction with the SEL/REP function.

Index No.	Name	Function
6	RECORD indicator (red)	Indicates the RECORD mode.

Transport	Amplifier	Transport RECORD indicator	Amplifier RECORD indicator	Recording
non RECORD mode	SAFE	dark	dark	×
non RECORD mode	READY	blinking	blinking	× ready
RECORD mode	SAFE	lights	dark	×
RECORD mode	READY	lights	lights	○

Blinking indicators means that the amplifier is in the RECORD-READY mode. Recording is being carried out only when the amplifier and transport RECORD indicators remain lit.

7	PLAY pushbutton switch (momentary)	Used to select the PLAY mode, or used in conjunction with the RECORD pushbutton to perform "Punch in" and "Punch out". Pressing the PLAY pushbutton during the F.FWD or REWIND mode stops the tape motion, then automatically starts the PLAY mode.

Index No.	Name	Function
8	STOP pushbutton switch (momentary)	Used to stop the tape motion, cancelling the existing mode of operation.
9	REWIND pushbutton switch (momentary)	Used to select the REWIND mode to wind the tape from right to left at high speed. This mode can be entered from any mode except EDIT.
10	F.FWD (FAST FORWARD) pushbutton switch (momentary)	Used to select the F.FWD mode to wind the tape from left to right at high speed. This mode can be entered from any mode except EDIT.
11	MEMORY pushbutton switch (momentary)	Used to stop the tape at the "00:00:00" position. This mode can be entered from any mode except both EDIT and RECORD.
12	TAPE TIMER (7-segment LED)	A 6-digit TIMER used to locate or log program material on the tape. The first two digits indicate sign and hour; the second two digits indicate minutes; and the last two digits indicate seconds.
13	RESET pushbutton switch	Used to reset the figure of the TAPE TIMER to "00:00:00".

Index No.	Name	Function
14	CUE lever	Used to carry out audio monitoring in the F.FWD and REWIND modes. To lock the lever, shift the lever to the full down position.
15	PITCH CONTROL	Used to control tape speed. The capstan speed can be controlled within ±7% of nominal speed when the PITCH CONTROL knob is pulled out. (variable mode) Turning clockwise causes the capstan speed to increase and turning counter-clockwise, causes the capstan speed to decrease. *PITCH CONTROL functions in both the RECORD and PLAY modes.*
16	PITCH CONTROL indicator (red)	Illuminates when the PITCH CONTROL knob is pulled out. (In variable mode).
17	NAB Hub Reel Hold Down Knobs	Used to attach EIA or NAB hub reels to the reel table. (Refer to 3-2-(1))
18	Supply Reel	Supplies tape for reproduction or recording.
19	Tension Arm	Damps tape tension fluctuations.
20	Impedance roller	Reduces wow and flutter.

Index No.	Name	Function
21	Takeup reel	Takes up tape.
22	Pinch roller	Correctly transmits the tape with the capstan.
23	Tension Arm with Safety switch	Damps tape tension fluctuations. When tape is exhausted, supply and takeup reel rotation is automatically stopped by the safety switch attached to the tension arm.
24	Capstan shaft	Keeps the tape speed constant in the reproduce and record modes.

Table 3-2 shows the location and function of each control and indicator on the Record/Reproduce electronics control panel.

Table 3-2 Record/Reproduce Electronics Controls and Indicators

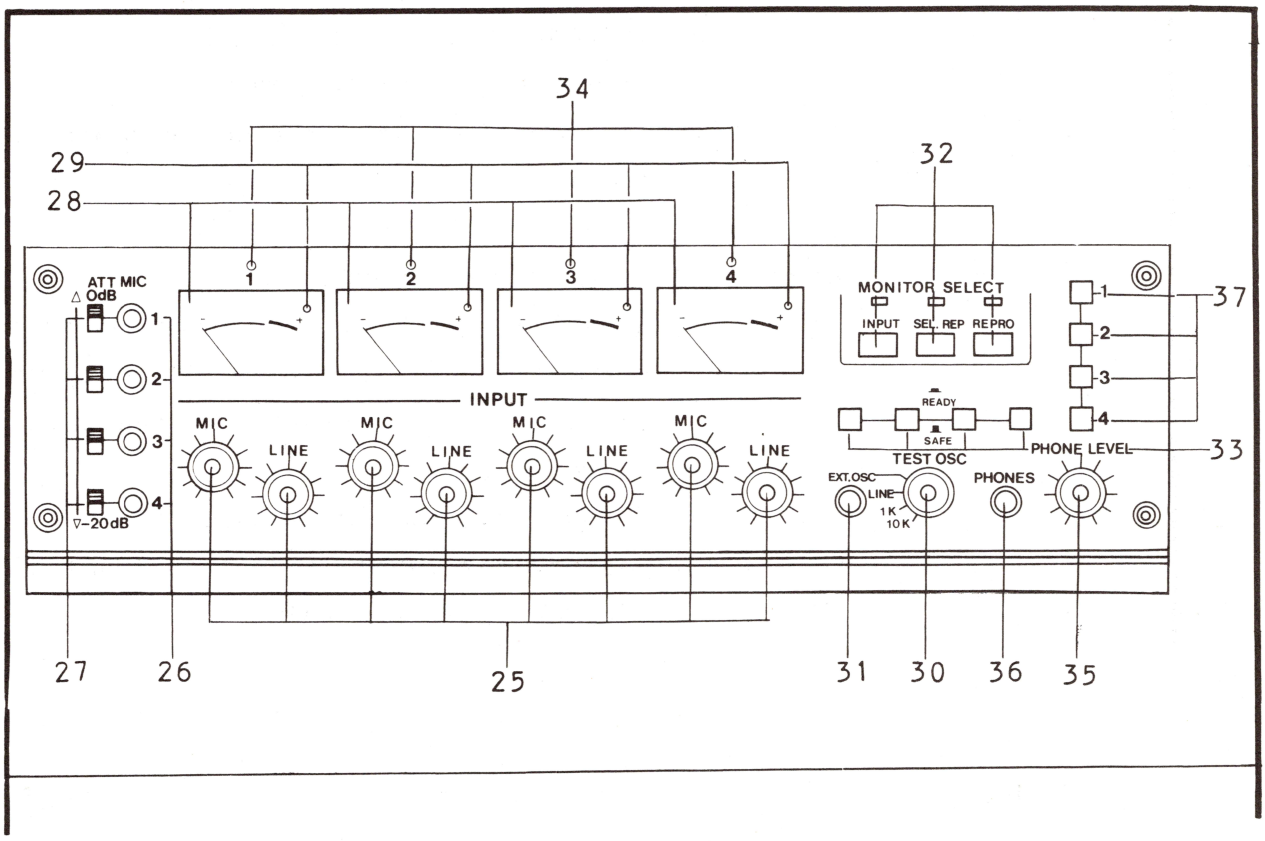

Index No.	Name	Function
25	MIC/LINE INPUT level controls	Used to control recording levels of microphone and line of the associated channel. Both levels can be mixed.
26	MIC INPUT jacks	Standard single-conductor phone jack for unbalanced microphone input (-70 dBm). Applicable microphone impedance is 150 ohm to 1 kohm.
27	MIC ATTenuator switches	Used to select the microphone input level. In upper position, input level is -70 dBm (0 dB). In lower position, input level is -50 dBm (-20 dB).
28	VU meters	Indicate the record and playback level of the associated channel depending on the mode of operation and position of the MONITOR SELECT switches. (Index No. 32 in this table.) The meters illuminate when the power is turned on.
29	PEAK indicators	Indicate signal peaks. When the input or output signal exceeds AMPEX operating level (185 nWb/m) by 15 dB (1040 nWb/m), the PEAK indicator lights. Trigger level can be adjusted. Factory set level is 12.4 dB (NAB) of 10.2 dB (IEC) over 0 VU.

Index No.	Name	Function
30	TEST OSCillator switch	Used to select the LINE INPUT signal. The line position should be normally set to get the audio signal from the line input connector for recording. The "1K" or "10K" position is set to feed a tone of 1KHz or 10KHz to the line input circuit for CUE tone recording or electrical adjustment. The EXT OSC position is set to feed the tone from the EXT OSC jack to the line input circuit.
31	EXT OSCillator jack	Used to feed signal from external audio oscillator. Standard single-conductor phone jack. Input impedance : 10 kohm Minimum input : -18 dBm
32	MONITOR SELECT pushbutton switches and indicator (green)	Used to select the output signals fed to the LINE OUTPUT connectors and the PHONE jack for monitoring. The signals are indicated on the VU meters of the associated channels. By pressing the INPUT pushbutton, the INPUT indicator lights up and the input signals from the LINE INPUT connectors and/or MIC jacks are fed to the output of all channels. By pressing the SEL/REP (selective reproduction) pushbutton, the SEL/REP indicator lights up and the signals via the record head are fed to the output of all channels.

Index No.	Name	Function
		Entering the RECORD mode, the monitor program on both SEL/REP and READY (Index No. 33 in this table) selected channel(s) are automatically switched from SEL/REP to INPUT. (The SEL/REP indicator remains lit.) This function is for "Punch in" and "Punch out". By pressing the REPRO pushbutton, the REPRO indicator lights up and the signals via the reproduce head are fed to the output of all channels.
33	READY/SAFE pushbutton switches	Alternate-action pushbutton switch used to select channels for recording in conjunction with the PLAY and RECORD pushbuttons on the transport. Selecting the "IN" READY position, the RECORD indicators illuminate or blink and the RECORD mode of associated channels can be entered or ready. Selecting the "OUT" SAFE position, the RECORD indicators turn off and activation of associated channels RECORD mode are cancelled. (Index No.5.6.7 in this table.)
34	RECORD indicators (red)	Indicate activation of associated channel RECORD mode.
35	PHONE LEVEL control	Used to control all channel PHONE LEVELs with interlocking.

Index No.	Name	Function
36	PHONES jack	Standard two-conductor phone jack available for both stereo and monaural headphones. Used to monitor the output signal selected by the MONITOR SELECT pushbutton switches. Load impedance : 8 ohm or greater Output level : -19 dBm with an 8 ohm load
37	PHONE SELECT pushbutton switches	Alternate-action pushbutton switches used to select the channel to be monitored. All channels can be mixed.

3-2 OPERATING INFORMATION

3-2-(1) USING THE REEL HOLD DOWN KNOBS

The NAB hub reel hold down knobs shown in Figure 3-1 are used to attach the NAB hub and EIA hub tape reel on to the reel table, proceed as follows:

For the EIA hub (2 1/4 inch diameter hub) tape reel;

(1) Remove the NAB reel hold down knob from the reel table by turning the inner knob counterclockwise and pulling it.

(2) Place the EIA hub tape reel onto the reel table so that the three slots of the tape reel correspond to the three notches of the reel shaft.

(3) Attach the reel hold down knob onto the reel to fix the tape reel and turn the inner knob clockwise to lock the reel hold down knob to the reel shaft.

For the NAB hub (4 1/2 inch diameter hub) tape reel;

(1) Place the reel hold down knob on the reel table and turn the inner knob clockwise to lock the reel hold down knob to the reel shaft.

(2) Place the NAB hub tape reel onto the reel table so that the three slots of the tape reel correspond to the three notches of the base of the reel hold down knob.
Pulling and turn the outer knob 60° to fix the tape reel.

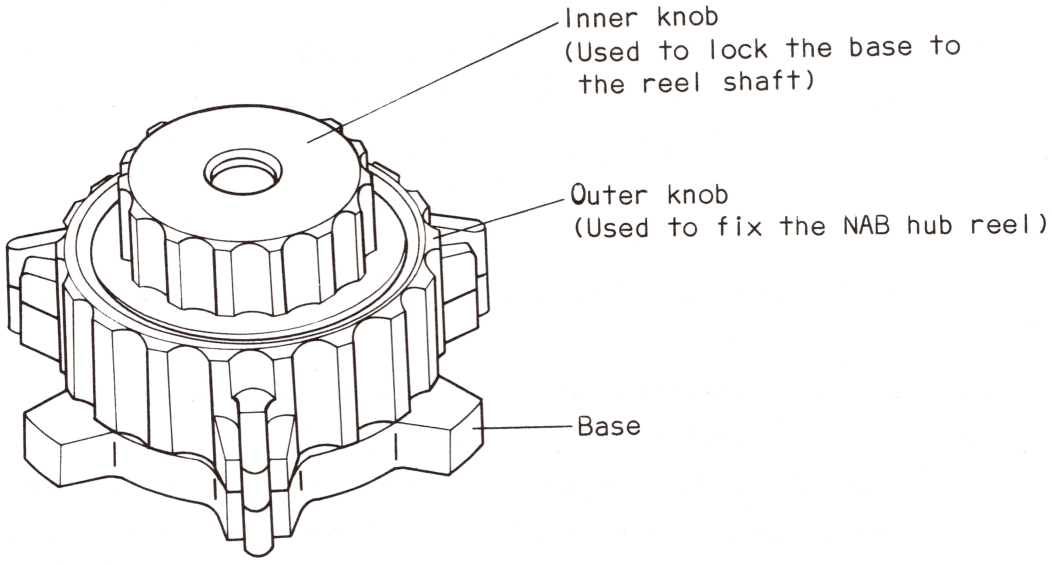

Figure 3-1 Reel Hold Down Knob

3-2-(2) PRE-OPERATING PROCEDURE

After the equipment has been installed as described in Section 2 of this manual and the operator has become familiar with all the operating controls and indicators described in Tables 3-1 and 3-2, prepare the recorder for operation as follows.

(1) Press the POWER switch to the "IN" on position.
The VU meters light up and the Tape Timer illuminate.

(2) Place a reel of tape on the supply (left-hand) reel table as described in Section 3-2-(1).
If metal reels are used, use reel-adjusting discs (shims) between the tape reels and the reel tables.
Note that the reel must turn counterclockwise as tape is pulled off the reel.

(3) Place the same size empty reel on the takeup (right-hand) reel table as described in Section 3-2-(1).
The same size reels should be used on both reel tables.

(4) Thread the tape as shown in Figure 3-2 and place the end of the tape in the slot of the empty reel, and rotate the reel for several times with holding the tape end and removing slack of the tape.

(5) Set the HIGH/LOW SPPED switch to the desired tape speed.

(6) Set the LARGE/SMALL REEL switch to correspond to the size of the reel hub diameter being used.
Place the switch to the "OUT" LARGE position for NAB hubs (4 1/2 inch diameter) or to the "IN" SMALL position for EIA hubs (2 1/4 inch diameter).

(7) If desired, connect a headset or monitor speaker/ amplifier to the PHONES jack.

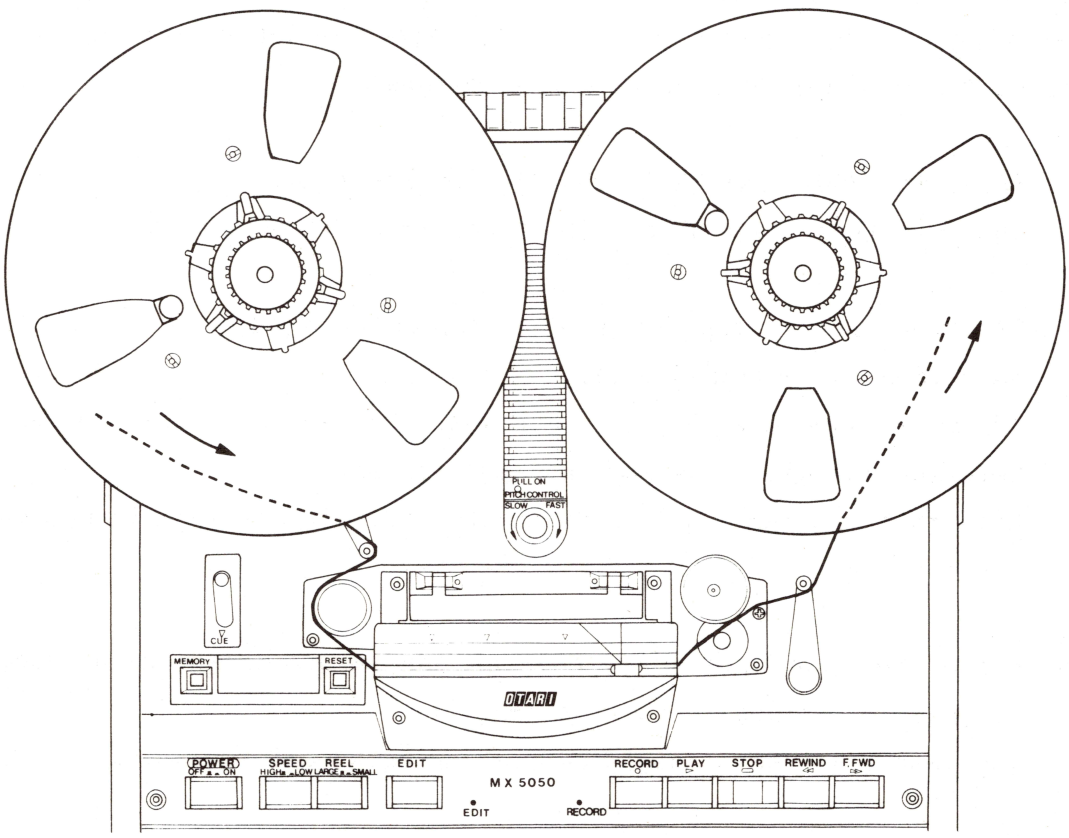

Figure 3-2 Tape Threading

3-2-(3) REPRODUCTION

To reproduce, proceed as follows:

(1) Perform all steps in the pre-operating procedure.

(2) Set the all channel READY/SAFE pushbutton switches to the "OUT" SAFE position to avoid mis-erasing of the recorded tape program.

(3) Press the "REPRO" of MONITOR SELECT pushbutton switches to select the tape monitoring.

(4) Depress the PLAY pushbutton to start the transport.

(5) To stop the reproduction of the tape program, depress the STOP pushbutton at a desired position.

3-2-(4) NORMAL RECORDING

To record normally, proceed as follows:

(1) Perform all steps in the pre-operating procedure.

(2) Set the READY/SAFE pushbutton switch(es) of the channel(s) desired to record to the "IN" READY position.
The red record indicators of the transport and the related channels of the record/reproduce electronics start blinking to indicate the RECORD-READY condition.

(3) Depress the "INPUT" of the MONITOR SELECT pushbutton switches to select the signal from the LINE INPUT connector and/or the MIC INPUT jack.

NOTE: Set the MIC ATT switch on the record/reproduce electronics to either the "0 dB" or "-20 dB" position in accordance with the microphone output level being used.
The microphone and the line signal can be mixed.

(4) Adjust the LINE and/or MIC INPUT level control(s) of related channel(s) selected to record so that the VU meter(s) of that channel(s) indicates 0 VU at the most audio peaks.
Note that the peak indicator located in the each VU meter blinks occasionally at this point.

(5) Depress the RESET pushbutton switch of the tape timer to set "00:00:00".

(6) Depress the PLAY and RECORD pushbuttons of the transport simultaneously to start recording.
The red RECORD indicators of the selected channel(s) and transport light up continuously to indicate the RECORD mode.

(7) While recording, the input signal(s) of each channel can be compared with the signal reproduced on each channel by depressing "REPRO" of the MONITOR SELECT pushbutton switches.

(8) In the RECORD mode, depress only the PLAY pushbutton on the transport to enter directly into the PLAY mode without stopping the tape motion, called "punch out".
The RECORD indicator(s) of the channel(s) and the transport changes to blinking instead of lighting up continuously to indicate the RECORD-READY condition.

(9) In the PLAY mode, of course the RECORD-READY condition, depress only the RECORD pushbutton on the transport to enter directly into the RECORD mode without stopping the tape motion, called "punch in".
The RECORD indicators light up continuously to indicate the RECORD mode.

(10) To stop tape motion, depress the STOP pushbutton on the transport.

(11) To find the exact "00:00:00" position on the tape, press the MEMORY pushbutton several times.

3-2-(5) RECORDING WITH SELECTIVE REPRODUCTION

The selective reproduction function causes the reproduced program to be monitored from the record head rather than from the reproduce head.
This enables a recording to be made on another channel synchronized (in phase) with the channel being reproduced.
To record with selective reproduction, proceed as follows:

(1) Perform all steps in the pre-operating procedure.

(2) Perform all steps in the normal recording procedure for the channel(s) to be prerecorded.

(3) Rewind the tape to the point where selective reproduction is to start.

(4) Set the READY/SAFE pushbutton switch(es) of the channel(s) selected for recording to the "IN" READY position.

(5) Press the "INPUT" of the MODE SELECT pushbutton switches.

(6) Adjust the LINE and/or MIC INPUT level control(s) so that the VU meter indicates 0 VU at the most audio peaks.
Note that the peak indicator located in the each channel VU meter blinks occasionally at this point.

(7) Then press the "SEL/REP" of the MODE SELECT pushbutton switches.

(8) Press the PLAY pushbutton to start tape motion.
At the point where overdub is desired, press the RECORD pushbutton to start recording on the selected channel(s).
The monitor program on the channel(s) not selected the READY is reproduced by the record head, synchronized with the recording program in phase. (SEL/REP)
The monitor program on the channel(s) selected the READY is the recording signal. (INPUT)

(9) When recording is complete, depress the STOP pushbutton to stop tape motion and deactivate the RECORD mode, or depress the PLAY pushbutton for punch out operation.

Note: The pitch control is available to finely adjust the tape speed to one track (pre-recorded track) with another track for overdubbing which can be used in both the Record and Reproduce modes.

3-2-(6) FAST WINDING

For fast-winding operations, and for editing or cueing, press the F.FWD or REWIND pushbutton switch as appropriate.
These pushbuttons can be pressed alternately without pressing the STOP pushbutton between fast-winding operations.
These modes may be entered into from any other mode except the EDIT mode.
Pressing the PLAY pushbutton during a fast-winding mode causes the tape to automatically come to a stop and then enter into the PLAY mode.
In a fast-winding mode, the tape lifters are automatically actuated and lift the tape away from the heads.
To monitor the tape in a fast-winding mode, the position of the tape lifters can be varied by operation of the CUE lever.
Thus the distance of the tape from the heads may be varied to control the signal level from the tape.

3-2-(7) EDITING AND SPLICING TAPE

For editing and splicing operations, the CUE lever can be used in fast-winding modes to quickly locate the desired program material. In addition, there is an EDIT mode of operation, used as follows:

Depressing the EDIT pushbutton while in the PLAY mode removes power from the takeup reel and causes the tape to be spilled off on the takeup side of the transport.
This mode is used to facilitate cutting out unwanted tape.
The EDIT mode can also be entered into from the STOP mode by pressing the PLAY pushbutton after the EDIT pushbutton is depressed.
The tape-splicing block (Figure 3-3) mounted on the head cover can be used to hold the tape for ease in cutting the tape with a single-edged razor blade and applying splicing tape.
Use 7/32-inch width splicing tape (3M Co., No. 41), and never use cellophane tape.

The tape splicing block has the following features:

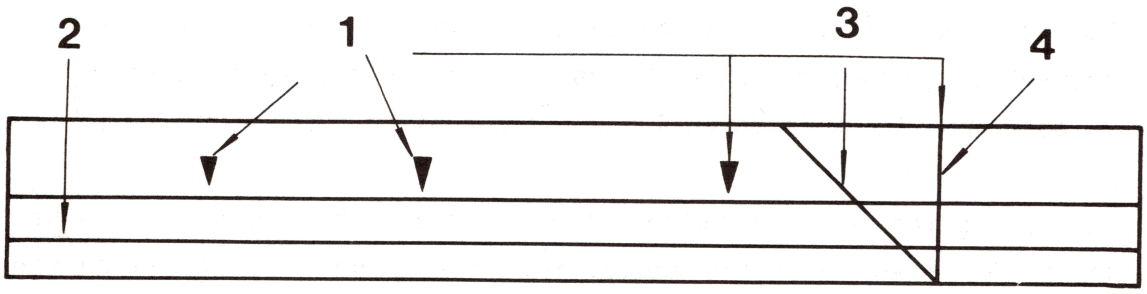

Figure 3-3 Tape Splicing Block

1 Head-stack indicator marks:	Indicates location of the individual head stack.
2 Tape-guide channel:	Holds the tape for ease of cutting and splicing.
3 45° cutting guide:	Used to guide tape cutter for a diagonal cut for splicing .
4 90° cutting guide:	Used to guide tape cutter for a vertical cut.

To determine the exact location of the point where the tape should be cut during editing, note that the distance from the right or left hand calibration mark to the 90°cutting guide is the same as the distance from the right or left hand tape guide assembly to the center of the reproduce head.

SECTION 4
GENERAL INFORMATION OF MAINTENANCE

4-1 TEST AND MAINTENANCE EQUIPMENT REQUIREMENTS

All maintenance, electronic, and mechanical test equipment required during maintenance, alignment, and adjustment of the recorder is listed in Table 4-1 and the standard test tapes are listed in tables 4-2, and 4-3.
In addition, recommended maintenance periods are shown by accumulative hours of usage and/or elapsed period of time, whichever comes first.
Equivalent equipment can be substituted for the equipment suggested in the table.

Table 4-1 Test and Maintenance Equipment

Equipment Type	Suggested Model	Used For	Period
Head cleaner	Ampex 087-007 or 4010823	Cleaning heads and guides	8 hours
Isopropyl or denatured alcohol	Any	Cleaning capstan pinch-roller	8 hours
Q tips	Any	Cleaning heads and guides	8 hours
Head demagnetizer	Ampex 4010820	Demagnetizing heads and guides	8 hours
Lubricating oil	Anderol #456 (TENNECO)	Oiling of capstan, pinch roller	1,000 hours or 6 months
Spring scales 500g, 1kg, 3kg (0-16 oz, 0-32 oz, and 0-10 lbs)	Any (pushing and pulling)	Mechanical adjustment	1,000 hours or 6 months
Vacuum cleaner and brushes	Any	General cleaning	1 month
Standard alignment and flutter test tape	Refer to Table 4-2 and 4-3	Reproduce amplifier alignment and Flutter test	150 hours or 1 month

Equipment Type	Suggested Model	Used For	Period
Audio oscillator	Hewlett Packard 200CD or 204C	Overall frequency response and signal-to-noise measurement	150 hours or 1 month
Ac voltmeter (VTVM)	Hewlett Packard 400E or 400FL	Same as above	Same as above
Bandpass filter	Refer to Figure 7-1	Same as above	Same as above
Flutter meter	Meguro Electronics Corp. MK668C or MK669	Flutter and wow, tape speed measurement	150 hours or 1 month
Wave analyzer	Hewlett Packard 3581A or 339A	Distortion and crosstalk measurement	Same as above
Test cables	Refer to text		
Technicians tools			
Allen wrenches	Metric		
Volt-ohm meter	20,000 ohms/volt any brand	Test and adjustment	

Table 4-2 Flutter Test Tapes

TAPE WIDTH (INCHES)	SPEED (IN/S)	FREQUENCY (HZ)	AMPEX CATALOG NO.
1/4	7 1/2	3000	01-31326-01
1/4	15	3000	01-31316-01

Table 4-3 Reproduce Alignment Test Tape

Tape speed	Equalization	MRL *1 Catalog number	Reference level (Fluxivity)
15 ips	NAB	21J205	250 nWb/m *2
7 1/2 ips	NAB	21J204	250 nWb/m *2
15 ips	IEC	21J303	320 nWb/m *3
7 1/2 ips	IEC	21J302	320 nWb/m *3

*1 Magnetic Reference Laboratory.

*2 Short circuit flux.

*3 Open circuit flux which corresponds to 290 nWb/m of short circuit flux.

SECTION 5
ROUTINE MAINTENANCE AND CONVERSION INFORMATION

5-1 ROUTINE MAINTENANCE

It is important that routine maintenance be performed at the recommended intervals.
Exterior cleaning and demagnetization should be performed after every eight hours of operation, and the interior of the transport should be cleaned once a month.
Lubrication should be performed after 1,000 hours of operation or after 6 months, whichever comes first.

5-1-(1) CLEANING

Oxide particles from the magnetic tape tend to collect on components in the tape path and degrade the performance of the recorder.
To clean the head assembly, proceed as follows:

(1) Disconnect the power cable from the power supply.

(2) Lift the head cover as shown in Figure 5-1.

CAUTION

WHEN CLEANING THE HEADS, USE THE RECOMMENDED SOLVENT (HEAD CLEANER) ONLY TO AVOID DAMAGING THE HEADS.
KEEP THE HEAD CLEANER OFF PLASTIC FINISHES AND THE CAPSTAN PINCH ROLLER.
DO NOT USE METAL TOOLS THAT COULD SCRATCH THE HEADS.

(3) Clean each head thoroughly with a cotton-tipped applicator (Q tip) dampened with head cleaner.

(4) Use isopropyl alcohol to clean all tape-guiding components the capstan shaft, and the capstan pinch roller.

CAUTION

1. *DO NOT USE A HEAD CLEANER ON THE CAPSTAN PINCH ROLLER, SINCE THIS WILL CAUSE DAMAGE AND TAPE SLIP.*
2. *BEFORE REMOVING THE REAR COVER, THE PLUG MUST BE DISCONNECTED FROM THE POWER SUPPLY TO AVOID AN ELECTRIC SHOCK.*

(5) Remove the rear cover of the recorder by removing 10 screws, then open the Control P.C. Board Ass'y by removing both sides 6 screws. (Refer to Figure 5-7 .)

(6) Use a vacuum cleaner and a small brush to remove all dust or contamination from the interior of the transport.
If necessary lightly moisten brush with isopropyl alcohol to clean parts.

(7) Install the rear cover and the Control P.C. Board Ass'y.

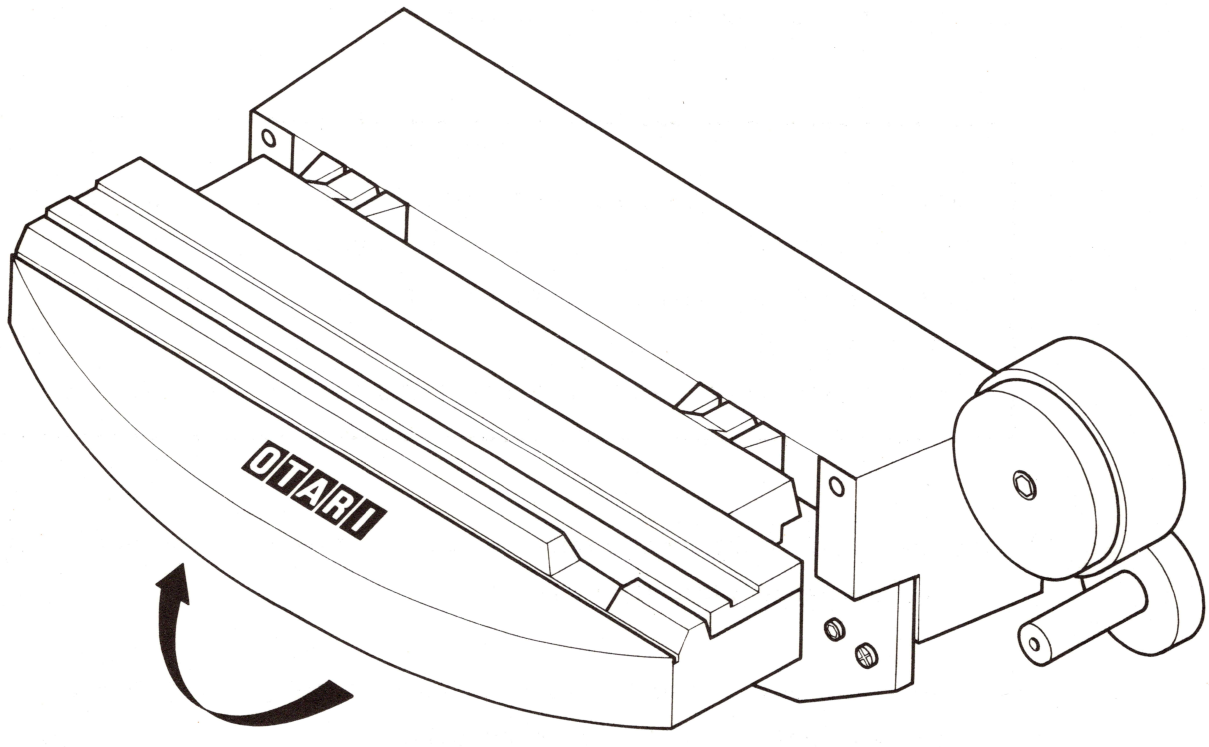

Figure 5-1 Lifting the Head Cover

5-1-(2) DEMAGNETIZING

The heads and tape guiding components in the tape path should be demagnetized after every eight hours of operation.
These components can acquire permanent magnetization that increases noise and distortion, and partially erases high frequencies on recorded tapes.
Use a hand-held head demagnetizer to demagnetize all components in the tape path as follows:

1. Turn equipment power off and move any recorded tape near the transport away (tape could be partially erased by the demagnetizer).

2. Lift the head cover as shown in Figure 5-1 .

3. Cover the demagnetizer tips with an adhesive tape to prevent scratching the head stacks.

4. With the demagnetizer at least three feet away from the transport, connect the demagnetizer to a power source.

5. Slowly move the demagnetizer tips close to the head, lightly touch the demagnetizer tips to the face of one head stack and slowly move the tips up and down at the entire face of the stack several times.
   Then slowly withdraw the demagnetizer as shown in Figure 5-2 .

6. Repeat step 5 for each head stack.

7. Repeat the motions in step 5 for each guide and other metallic parts in the tape path.

8. Slowly move the demagnetizer at least three feet away from the transport and then disconnect the power from the demagnetizer.

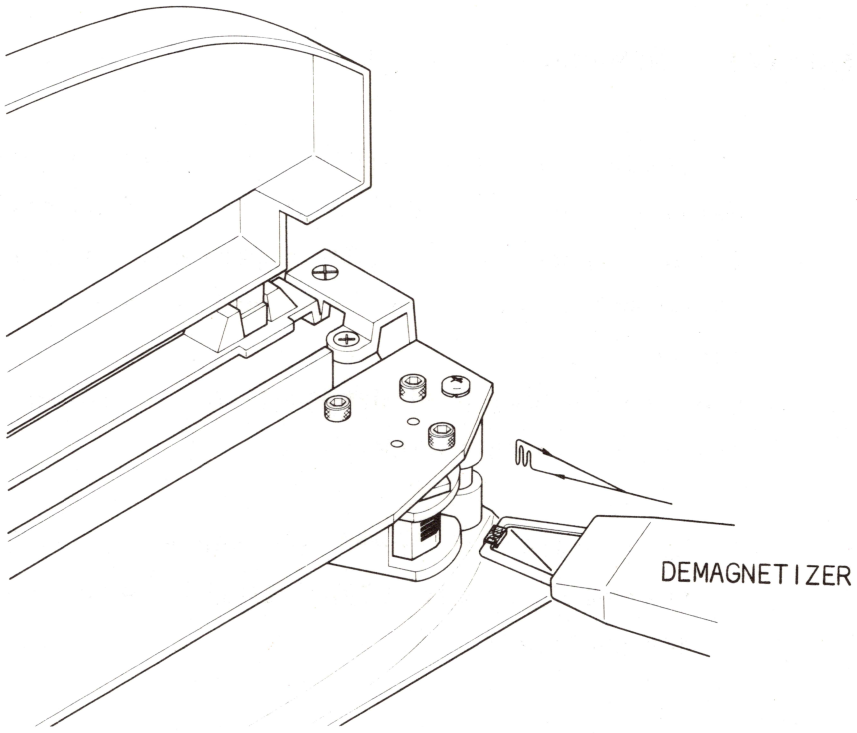

Figure 5-2 Demagnetizing

5-1-(3) LUBRICATION

The only components requiring lubrication are the capstan sleeve bearing and the capstan pinch roller sleeve bearing.
Refer to Figure 5-3 and proceed as follows:

CAUTION

1. *DO NOT USE ANY OIL EXCEPT ANDEROL #456 FOR LUBRICATION.*
2. *BE CERTAIN TO CLEAN THE CAPSTAN SHAFT THOROUGHLY.*
   LUBRICATIONG OIL COULD RUIN THE CAPSTAN PINCH ROLLER AND MAGNETIC TAPE.
   CLEAN THE CAPSTAN (AND PINCH ROLLER) WITH ISOPROPYL ALCOHOL AFTER LUBRICATION.

For the pinch roller sleeve bearing and the capstan sleeve bearing:

1. Remove the pinch roller cap by removing the screw on it.

2. Remove the pinch roller from the pinch roller shaft.
   Note that there is one polyslider washer on each side of the pinch roller bearing.

3. Remove two hex socket head screws on the Head Housing Cover.
   Remove the head front escutcheon by removing the two screws on it and remove the head rear escutcheon by removing the three screws on it.
   Turn the Dust Cap counterclockwise and pull off from the capstan.

4. Apply 2 or 3 drops of oil to this felt collar.
   Do not over lubricate.

5. Apply a few drops of oil to the pinch roller sleeve bearing.

6. Wipe off any excess oil and install the dust cap, head front escutcheon, head rear escutcheon, and pinch roller cap in the reverse order.

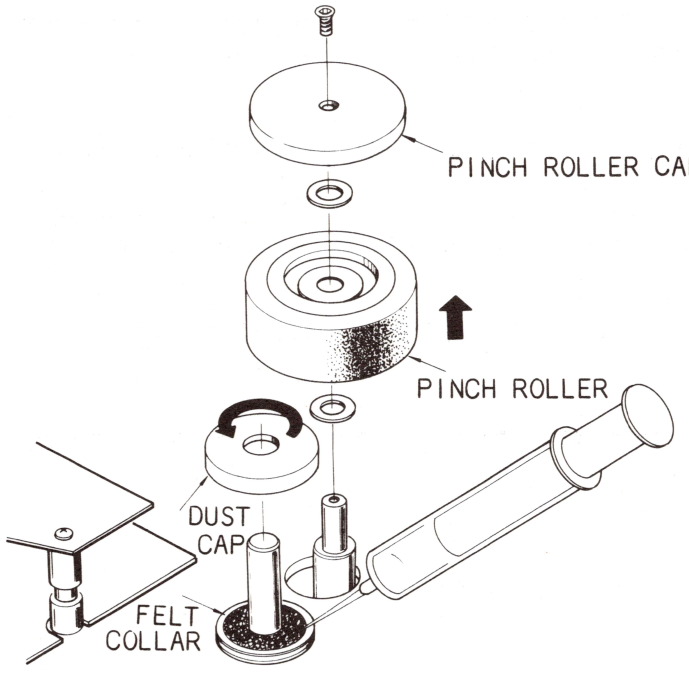

Figure 5-3 Lubrication

5-2 TAPE REPLACEMENT

The MX-5050 BQⅡ is set at the factory for Scotch #226 Recording Tape.
If another tape is to be used, the following adjustment may be required for optimum tape performance.
Refer to Section 7.
Required adjustments are:

1. The record bias adjustment.

2. The record level adjustment.

5-3 EQUALIZER CHANGE

The equalizer between the NAB or the IEC can be changed by replacing the REC/REPRODUCE Amplifier P.C. Board Ass'y.
However, a fine equalizer adjustment and a record level set are required.
Refer to Section 7 to aid the fine adjustment.

Table 5-1 Record level

Reference fluxivity	Relative level	Test Tape	Recording tape to be used
185 nWb/m*	0 dB	Ampex Operating level	Scotch 177, Ampex 641
250 nWb/m*	+2.6 dB	MRL NAB standard	Scotch 206,207,226,250 Ampex 406,407,456
320 nWb/m**	+3.8 dB	BASF or MRL IEC Standard	IEC Equalization

* Short circuit flux.
** Open circuit flux.

5-4 LINE VOLTAGE CONVERSION

The line voltage is converted by resoldering the wiring on the voltage selection terminal, Proceed as follows:

(1) Remove the rear cover by removing 10 screws.
(Refer to Figure 6-1)

(2) Resolder the lead wire of the voltage selection terminal located on the supply reel Ass'y to the desired voltage terminal marked as shown in Figure 5-4.

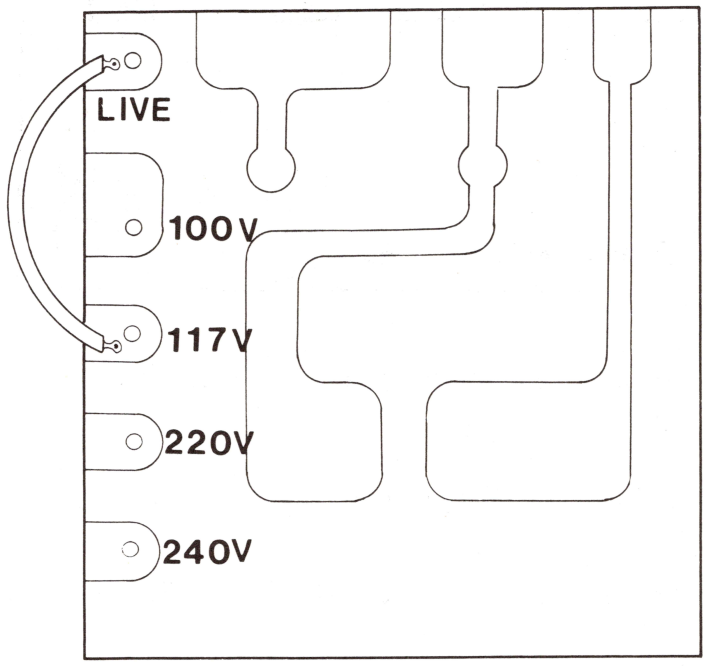

Figure 5-4 Voltage Selection Terminal

5-5 FUSE REPLACEMENT

If a fuse is blown, it is important that the possible cause is checked before replacing the fuse.

CAUTION

FOR CONTINUED PROTECTION AGAINST FIRE HAZARD, REPLACE ONLY WITH THE SAME TYPE OF FUSE.

BEFORE REPLACING THE FUSE, REMOVE THE POWER CORD FROM THE POWER SOURCE.

Information concerning the seven fuses can be found in Table 5-2 .
For the main power fuse (FS801), proceed as follows:

1. Remove the board on the left side by removing four hex socket head screws.

2. Replace the main power fuse (FS801) on the power switch P.C. Board.

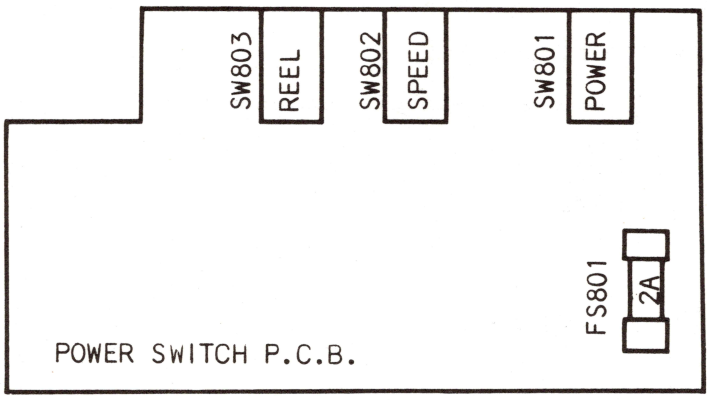

Figure 5-5 Main Power Fuse Location

For other fuses (F1 ~ F6), proceed as follows:

1. Remove the rear cover by removing ten cross-recessed screws.

2. Remove six cross-recessed screws marked "OPEN" on the Control P. C. Board.

3. Pull the Control P.C. Board down, and replace the blown fuse.

Table 5-2 Fuse Information

Reference number	Current	Rating				Otari part number	Used for
		voltage	size(inch,mm)	carry	blow		
FS801	2A	250V	1/4x1 1/4 inch 6.3x32mm	110%	135% in 1 hour	FH7E020	Primary Circuit
F1	1A	"	13/64x45/65 inch 5x20mm	"	" " "	FH7F010	VU Meter Lamps
F2	2A	"	" " " " " "	"	" " "	FH7F020	DC Servo Cap. Motor Driver
F3	"	"	" " " " " "	"	" " "	"	Pinch roller Solenoid, Relays, and DC Servo Cap. Motor Control
F4	"	"	" " " " " "	"	" " "	"	±15V Amplifier
F5	"	"	" " " " " "	"	" " "	"	"
F6	"	"	" " " " " "	"	" " "	"	Brake Solenoids, +5V Transport Control LEDs

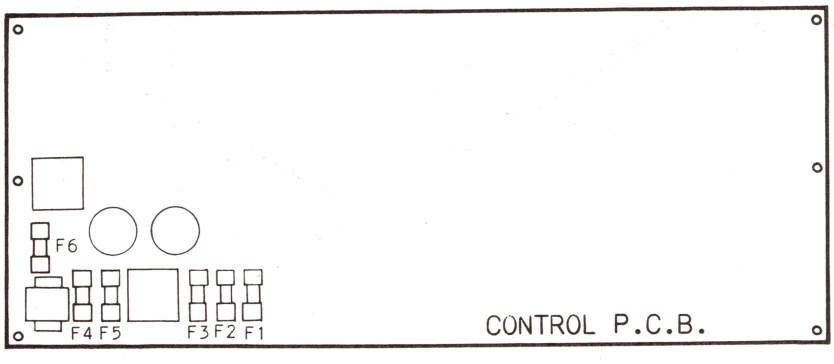

Figure 5-6 Internal Fuse Location

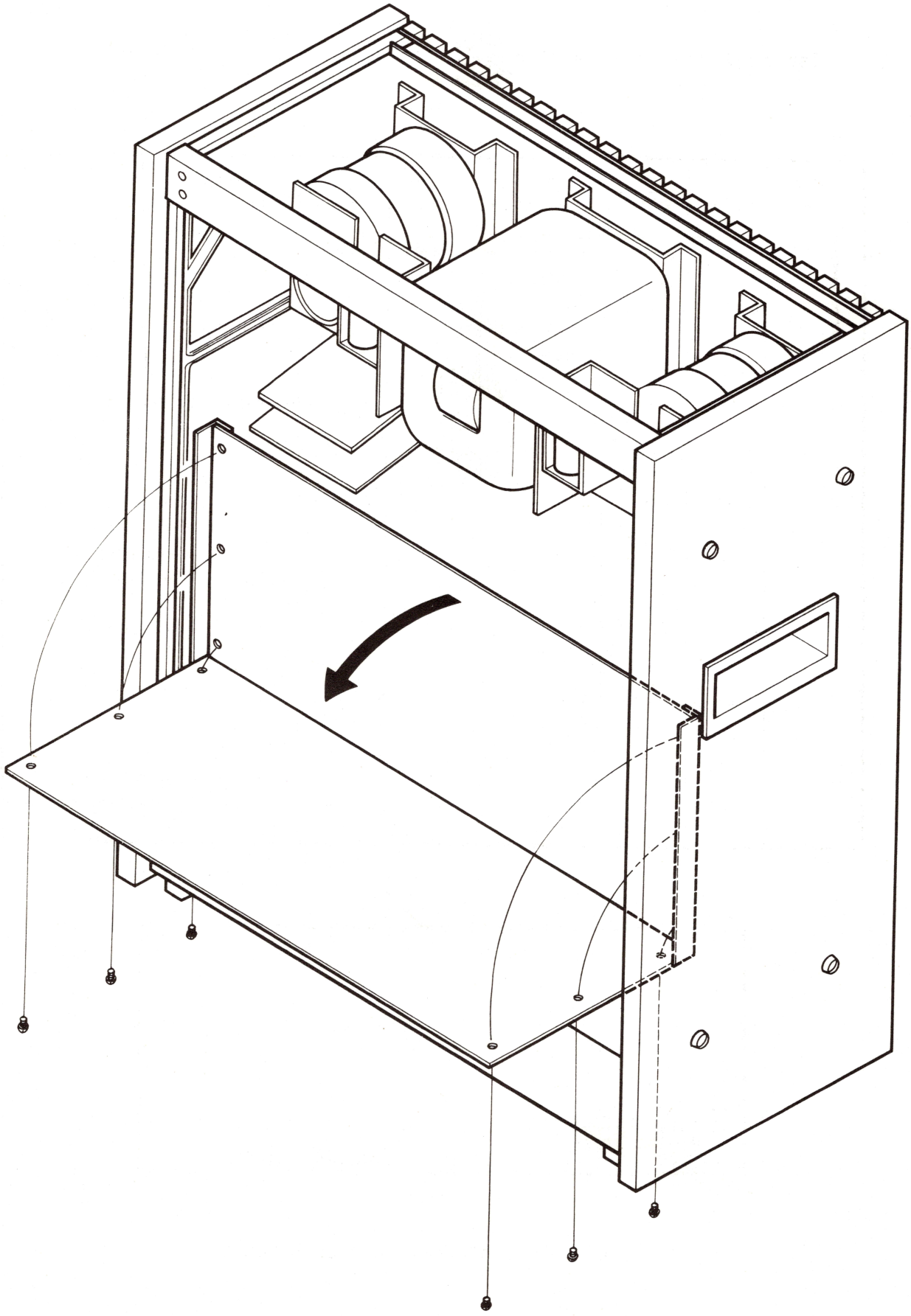

Figure 5-7 Rotating Control P.C.B.

SECTION 6
TAPE TRANSPORT MAINTENANCE

Tape transport maintenance includes procedures for adjusting the supply and takeup reel brakes, the capstan pinch roller pressure and the tape speed adjustment.

6-1 TRANSPORT ACCESS

To gain access to the recorder transport, proceed as follows:

1. Disconnect the power plug and place the recorder in an upright position.

2. Remove the rear cover, feet, and deck stand by removing ten cross-recessed screws on the cover.

3. Open the Control P.C. Board by removing six cross-recessed screws marked "OPEN".

4. Remove both side boards by removing the four hex socket head screws on each board.

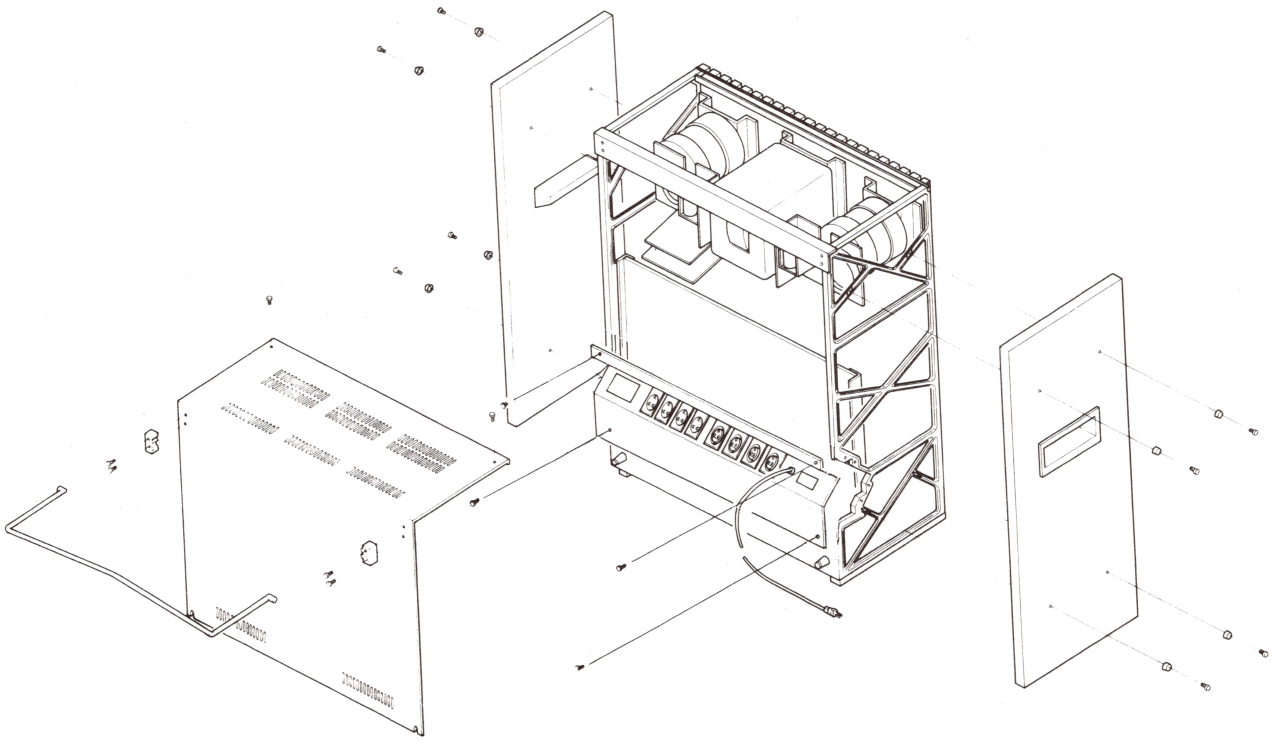

Figure 6-1 Tape Transport Access

6-2 BRAKE ADJUSTMENT

The brake system on each reel stops the rotation of the reel when power is removed.
The brakes are checked and adjusted with the power removed.
Since the brake force is different for each direction of rotation (brake differential), and there is but a single adjustment, the force is checked and adjusted for the best compromise force in each direction.
In the following steps, an empty 10 1/2 inch diameter NAB reel (4 1/2 inch diameter hub) is used and a length of cord or twine is wrapped on the hub.
A spring scale is attached to a small loop formed at the free end of the cord or twine.
If a 10 1/2 inch diameter NAB reel (4 1/2 inch diameter hub) is not available, a 7 inch diameter reel (2 1/4 inch diameter hub) may be used but all readings must be multiplied by a factor of 2.
Refer to Table 6-1 for the braking force specifications.
Proceed as follows:

1. Place an empty 10 1/2 inch diameter NAB reel on the supply reel table.
   Secure with a hold down knob.

2. Wind a length of cord or twine a few turns counterclockwise on the hub.
   Tie a loop at the free end of the cord or twine.

3. Insert the hook of a 500 g (0-16 ounce) spring scale through the loop and hold the spring scale upright as shown in Figure 6-2.

4. Pull on the scale slowly to make the reel rotate counterclockwise (direction "B" in Figure 6-2).
   While being sure the cord does not rub against either flange, note the scale reading.
   The reading should meet the value listed on Table 6-1.

5. Wind the cord or twine in a clockwise direction on the supply reel.

6. Repeat steps 3 and 4 to make the reel rotate clockwise (direction "A" in Figure 6-2).
   The reading should meet the value listed in Table 6-1.

7. If the readings were low in both directions, remove the brake spring (shown in Figure 6-3) from the existing anchor hole on the brake lever and install the spring in the next hole located farther away from the brake solenoid.

8. If the readings were high in both directions, move the spring anchor point closer to the brake solenoid.

9. If the brake spring was moved, repeat steps 2 through 6 to check the results.

10. Repeat the brake adjustment procedure on the takeup reel.
    Note that a high braking force is present when the takeup reel is rotated clockwise.
    The braking force specifications are the same as for the supply reel.

Table 6-1 Braking Force Specifications

A	100 to 125 grams (3.6 to 4.5 ounces)
B	225 to 275 grams (7.9 to 9.7 ounces)

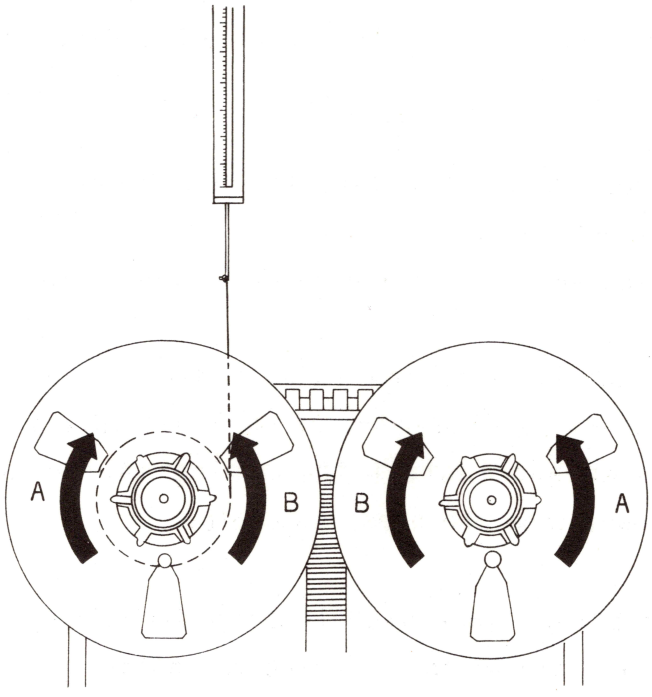

Figure 6-2 Brake Measurement

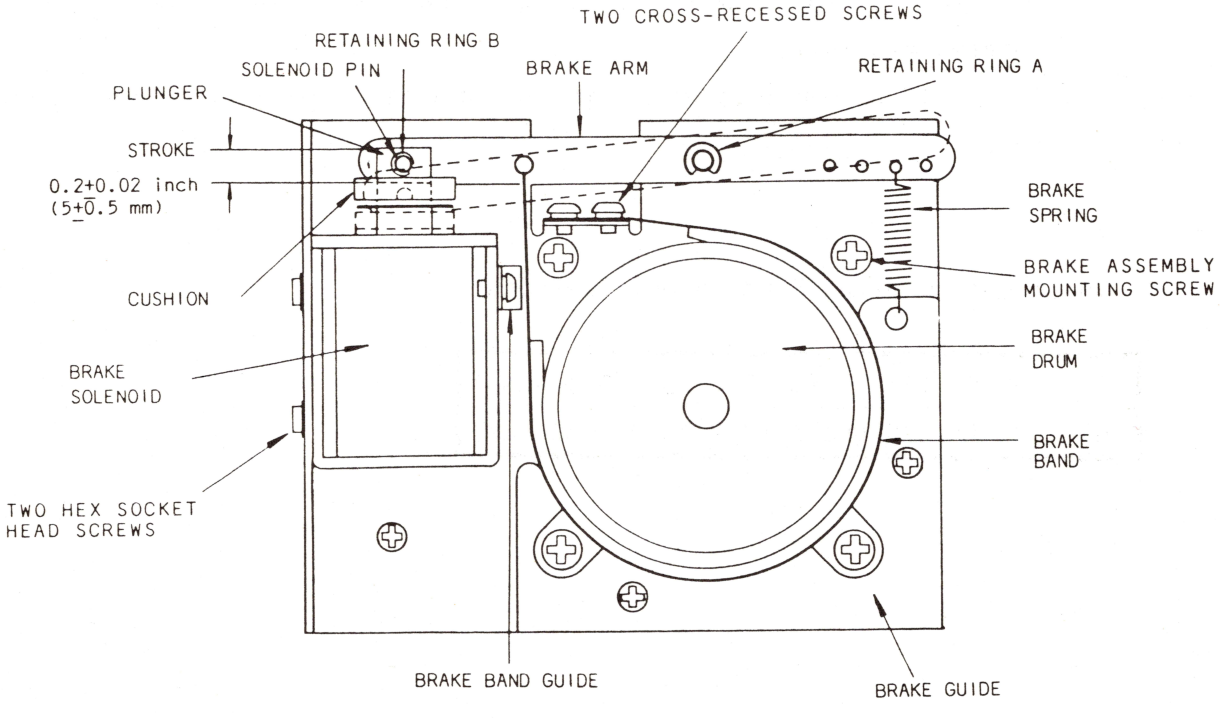

Figure 6-3 Brake Assembly Location

6-3 CAPSTAN PINCH ROLLER PRESSURE ADJUSTMENT

The capstan pinch roller's pressure against the capstan is determined by the pinch roller solenoid spring.
This force is adjusted by means of the nut shown in Figure 6-5 .
The nut is adjusted to obtain a force of 2.5 ~ 2.7 kg (5.5 ~ 5.9 pounds).
The resistance of the solenoid coil rises with the temperature and causes the solenoid's force to decrease.
Therefore, do not adjust the pinch roller's pressure until the recorder has been operated in the play mode for at least 30 minutes.
The following procedure should be adhered to.

1. Remove both reels from the reel tables for capstan pinch roller pressure adjustment.

2. Tie a length of cord or twine together to form a continuous loop. Place one end of the loop around the capstan pinch roller shaft.

3. Press the EDIT pushbutton, and then press the PLAY pushbutton. The pinch roller will move to make contact with the capstan and both will rotate.

4. Hook a 3 kg (0 to 10 pounds) spring scale to the other end of the cord and pull the cord taut, straight to the center of the capstan as is shown in Figure 6-4.
   Do not let the cord come into contact with the rotating pinch roller.

5. Pull on the scale and note the scale reading when the pinch roller just loses contact with the capstan (the pinch roller stops rotating).
   The scale reading should be 2.5 ~ 2.7 kg (5.5 ~ 5.9 pounds).

6. If a proper scale reading was not obtained in step 5, loosen the locknut and adjust the pressure nut as shown in Figure 6-5 .
   Turning the pressure nut towards the spring increases pinch roller pressure.
   Tighten the locknut.

7. After adjustment has been completed, check that the plunger of the solenoid reaches bottom within the solenoid coil (the pinch roller can easily be pushed away from the capstan).
   If the plunger of the solenoid does not reach bottom, loosen the locknot and turn the pressure nut away from the spring until the plunger of the solenoid reaches bottom.
   Recheck the pressure adjustment and tighten the locknut.

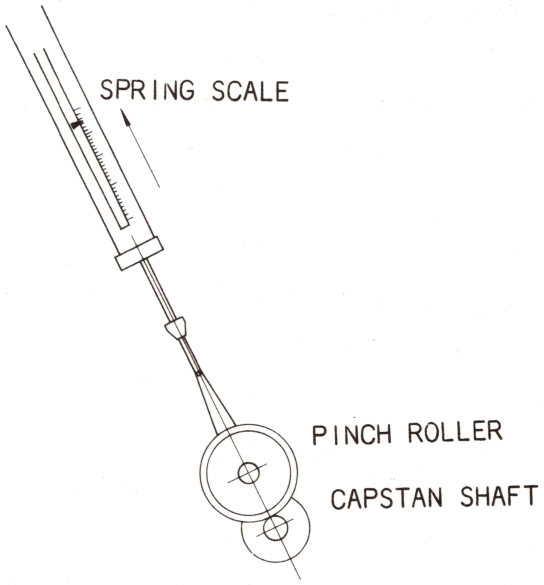

Figure 6-4 Pinch Roller Pressure Measurement

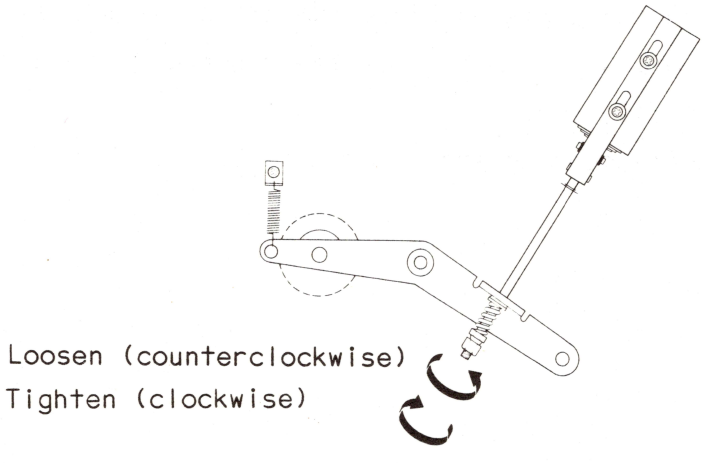

Figure 6-5 Pinch Roller Pressure Adjustment

6-4 TAPE SPEED ADJUSTMENT

The tape speed can only be adjusted on the dc servo capstan motor, by using the speed adjustment controls on the Servo control P.C. Board. This adjustment follows the tape speed measurement in Section 7, and the speed adjustment controls shown in Figure 6-6 are adjusted as necessary.

It is important that the PINCH CONTROL should be placed in the "IN" fixed position during tape speed adjustment.

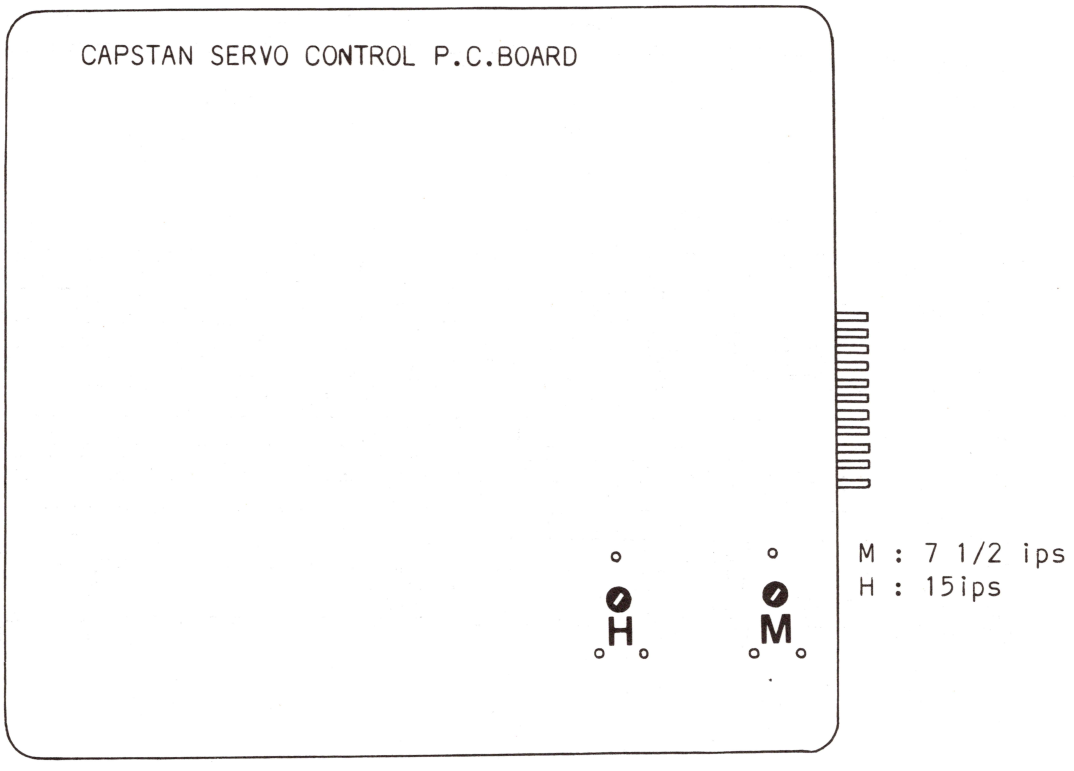

Figure 6-6 Capstan Servo Cantrol P.C.B.

6-5 TAPE TRANSPORT TIMING CHART

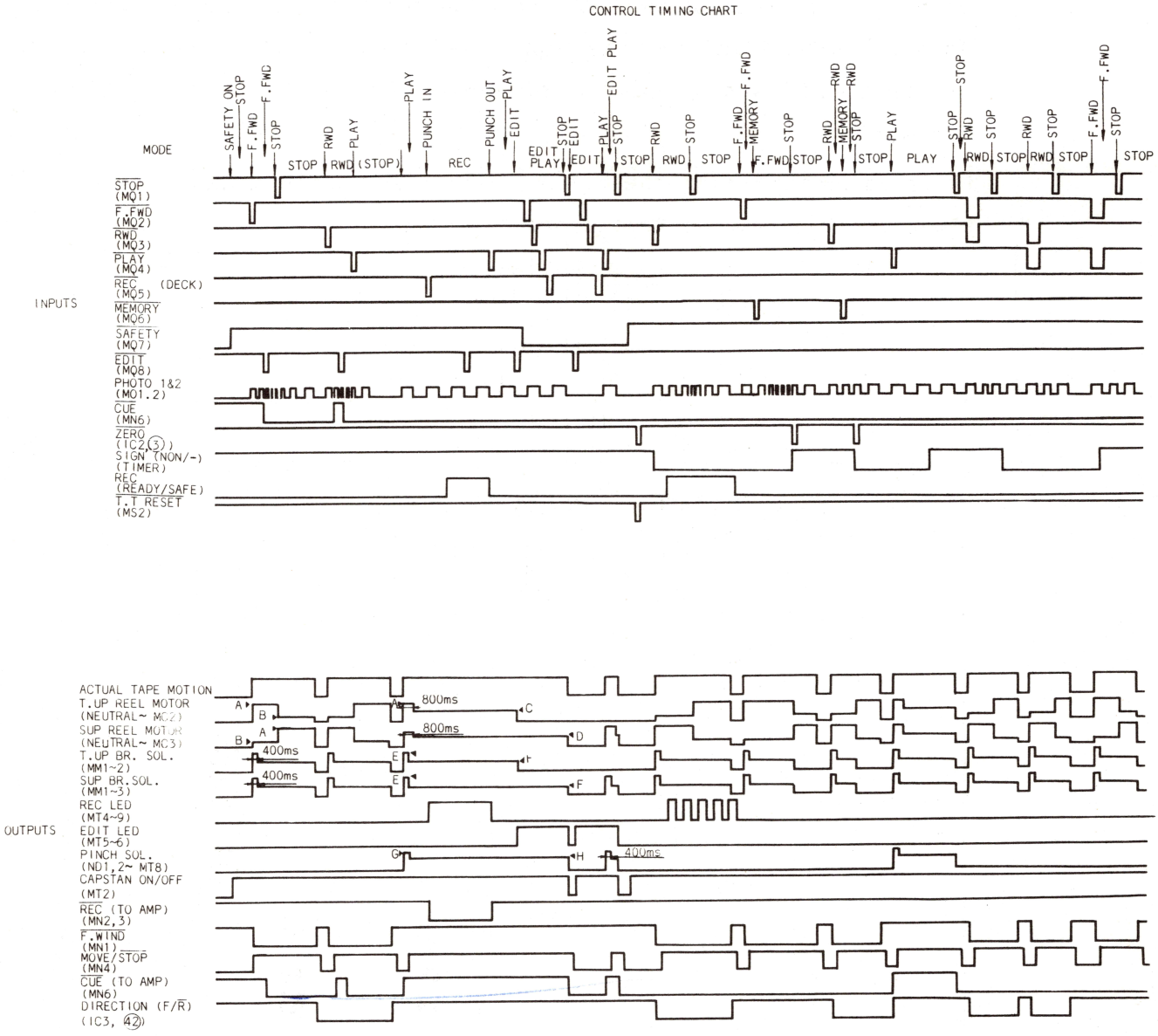

* REEL MOTOR SUPPLY VOLTAGE (AC)

REEL SIZE	LARGE	SMALL
A	100 V	80 V
B	28 V	22 V
C	60 V	50 V
D	43 V	35 V

** SOLENOID SUPPLY VOLTAGE (DC)

	VOLTAGE
E	27 V
F	12 V
G	22 V
H	17 V

Figure 6-7 Control Timing Chart

6-6 RECORDING PROCESS TIMING CHART

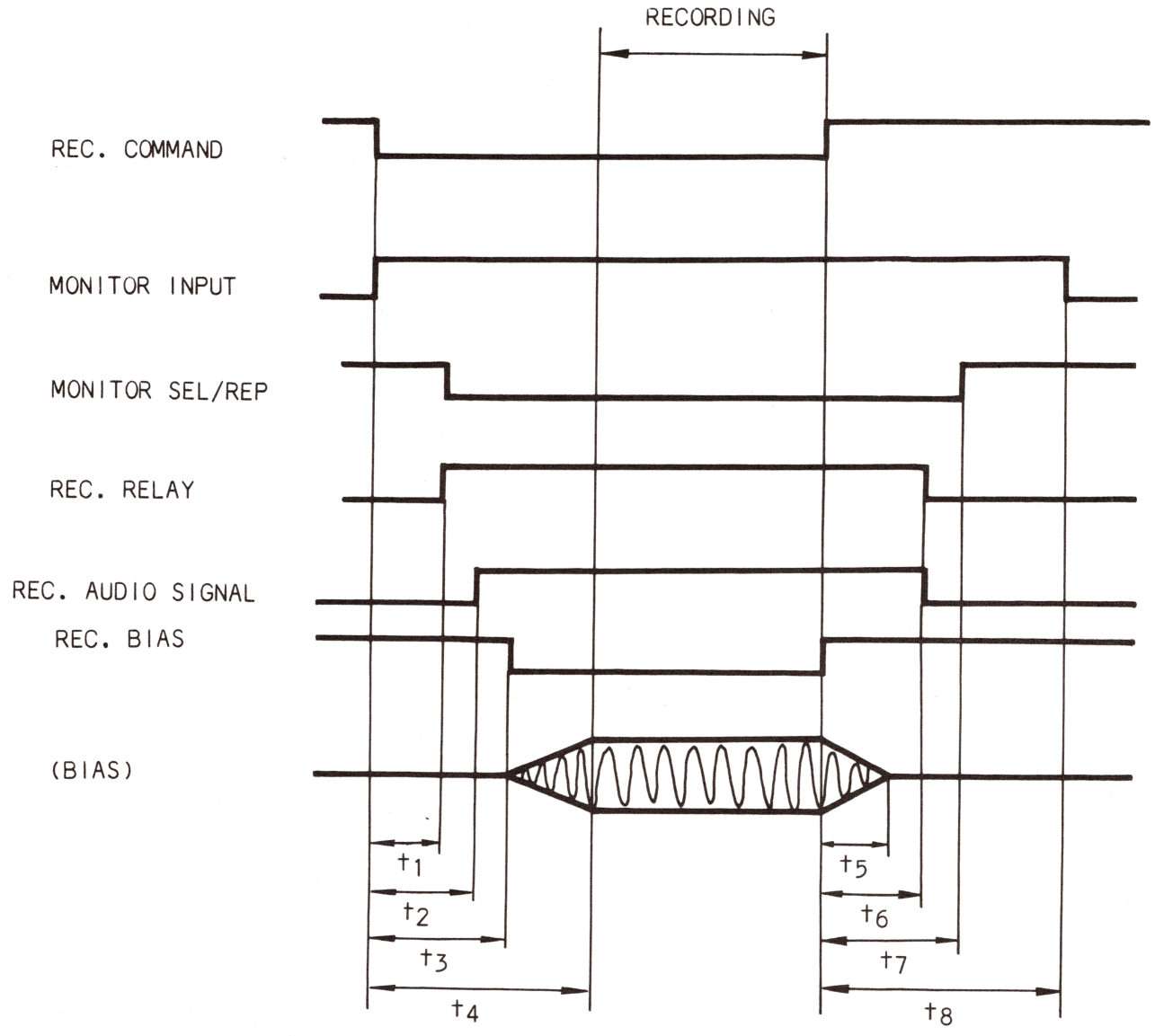

t1: MONITOR SEL/REP OFF & REC. RELAY ON operate time ; 36 msec
t2: REC. AUDIO SIGNAL start delay time ; 54 msec
t3: REC. BIAS start delay time ; 72 msec
t4: REC. BIAS rise time ;117 msec
+5: REC. BIAS fall time ; 40 msec
+6: REC. RELAY & REC. AUDIO SIGNAL release delay time ; 54 msec
+7: MONITOR SEL/REP ON operate time ; 72 msec
+8: MONITOR INPUT OFF operate time ; 126 msec

Figure 6-8 Recording Process Timing Chart

SECTION 7
PERFORMANCE TESTING AND ELECTRONIC ALIGNMENT

Performance testing should be made at regularly scheduled intervals (every 150 hours or every month) to ensure that the recorder is performing within specifications.
These tests should also be performed whenever the recorder appears to be malfunctioning and repairs to the equipment that may affect performance.
If the performance test is not successful, proceed to the applicable electronic alignment procedure.
It is important to clean and demagnetize the head and tape guiding components before performing the following steps.

7-1 GENERAL NOTICE

It is important to clean and demagnetize the head and tape guiding components before performing the test and alignment procedures.
The levels indicated in this section are at a 1 KHz frequency at the reference recording level of 250 nWb/m.
In the case of IEC equalization, the reference record level is 320 nWb/m that is 1.2 dB above 250 nWb/m.
Refer to Figure 7-10.

7-2 TEST TAPES

Test tapes are precisely recorded under controlled conditions and must be correctly handled and stored to retain accuracy.
Handle the test tapes as follows:

1. Clean and demagnetize the head and tape guiding components before installing the test tape.

2. Never store test tapes in areas where temperature or humid extremes.

3. Never run the test tapes on speeds other than a normal play run (never use the rewind or fast forward mode).
   This is further explained below.

During the alignment procedure, the rewind and fast forward modes should not be used.
After alignment, wind the tape completely on the takeup reel, interchange reels, thread the tape, and place the equipment in the play mode to wind the tape back on its original reel.
After extensive use, high frequency tones may be drop as much as 2 dB.
In addition, flutter indication may rise even though actual flutter remains unchanged.
Flutter increase is caused by demagnetization of the recorded signal from repeated plays, tape deformation due to tape tension, changes in temperature and humidity, and increased dropout resulting from tape wear.

7-3 TEST CONDITIONS

The test conditions specified in the following steps are to be met prior to performing the tests.
After these test conditions are met, continue with the following procedures for checking overall signal-to-noise, overall distortion, crosstalk, and flutter.

1. Clean and demagnetize the heads.

2. Use high quality low-noise tape such as Ampex 406, 407, 456, or Scotch 206, 207, 226, 246, 250, or an equivalent, and bulk erased to tape.

3. Turn the power on and allow the unit to warm up for 20 minutes.

4. Be sure the head cover is installed for all tests.

7-4 PERFORMANCE TESTS

Before performance testing, line input level check, line output level check, reproduce frequency response check, record level check, an overall frequency response check, and a SEL/REP level check are necessary.
Refer to section 7-6, ELECTRONIC ALIGNMENT, in this manual for checking procedures.
For performance testing, at first proceed as follows.
Demagnetize and clean the heads and all guiding component.

1. Set the REEL switch to the appropriate position.

2. Set the LINE OUTPUT LEVEL switches located on the Rec/Rep Amp. P.C. Board to "H" (has been set at the factory as standard), set each READY/SAFE pushbutton switch to the "OUT" SAFE position, and select INPUT of the MONITOR SELECT pushbutton switches.

3. Thread a reel of bulk-erased tape onto the transport, and push the PITCH CONTROL knob to its fixed position.

7-4-(1) OVERALL SIGNAL-TO-NOISE

The overall signal-to-noise test requires an ASA "A" weighted filter for weighted measurement and a noise filter for unweighted measurement to eliminate noise outside the audible frequency band.
The filter should be built into a small aluminum box and its circuit is shown in Figure 7-1.

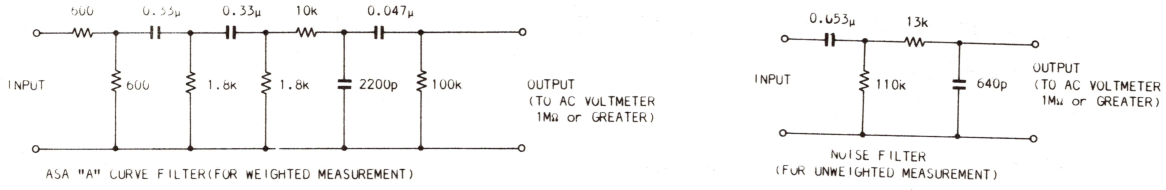

Figure 7-1 Filter Schematics

The signal-to-noise test ratio depends on reproduce equalization, bias calibration, and record equalization.
Proceed as follows:

1. Connect the filter to CH-1 LINE OUT and connect an ac voltmeter to the output of the filter.

2. Depress the REPRO pushbutton switch of MONITOR SELECT, and set the CH-1 LINE INPUT control to its full clockwise position.
   Reset the TAPE TIMER to "0:00:00".

3. Start the record mode and record for one minute.
   Rewind the tape to the "0:00:00" indication on the TIMER.

4. Reproduce the recorded portion and read the noise level on the ac voltmeter.

5. The S/N ratio is calculated by adding +4 dB standard level to the indication of the ac voltmeter, and an extra 12.4 dB for NAB equalizer or 11.2 dB for IEC equalizer.
   [Peak record level (1040 nWb/m) is +12.4 dB over 0VU for NAB (250 nWb/m), and +11.2 dB over 0 VU for IEC (320 nWb/m).]

6. Repeat steps 1 through 4 for the other channels as required, and change the tape speed to check all signal-to-noise ratios.

Table 7-1 Signal-to-noise specifications

EQ / Tape Speed	NAB		IEC	
	Weighted	Unweighted	Weighted	Unweighted
15 ips	69 dB	66 dB	69 dB	66 dB
7.5 ips	69 dB	66 dB	69 dB	66 dB

If signal-to-noise specifications are not met, check and adjust the following items.

1. LINE OUTPUT LEVEL switch position.
2. RECORD BIAS adjustment.
3. Reproduce equalization.
4. Record equalization.
5. Record and/or reproduce electronics
6. Head magnetization.
7. Magnetic flux from a motor, a soldering iron or a transformer near the recorder.

7-4-(2) OVERALL DISTORTION TEST

For an accurate distortion check, it is necessary to use an audio oscillator with less than 0.1% distortion and a wave analyzer with an adjustable bandwidth capability.
A wave analyzer with too narrow bandwidth may make it difficult to measure harmonics due to flutter components of the transport.

Measured total harmonic distortion will be affected by tape and modulation noise in addition to harmonic distortion.
To measure overall harmonic distortion, proceed as follows:

1. Connect a wave analyzer to CH-1 LINE OUTPUT and connect an audio oscillator to CH-1 LINE INPUT.

2. Depress the REPRO pushbutton switch of MONITOR SELECT, set the audio oscillator frequency to 1000 Hz.

3. Set the wave analyzer frequency to 1000 Hz, the bandwidth to 100 Hz, and the mode selector switch to AFC.

4. Start the record mode and adjust the CH-1 LINE INPUT control for a 0 VU reading on the VU meter.

5. Adjust the fine tuning control and input level control on the wave analyzer for a full scale reading of 100%.

6. Change the wave analyzer tuning control to 2000 Hz and measure the second harmonic content.
   The second harmonic content should not exceed 0.1%.

7. Change the wave analyzer tuning control to 3000 Hz and measure the third harmonic content.
   Third harmonic distortion is dependent upon the type of tape used, and the accuracy of the RECORD BIAS setting.
   A typical reading for low noise high output tape is 0.4%.

If distortion specifications are not met, check and adjust the follwoing items.

1. RECORD BIAS adjustment.
2. Head magnetization.
3. Record and/or reproduce electronics.

7-4-(3) CROSSTALK TESTS

It is important that blank bulk-erased tape be used for the crosstalk test.
To measure crosstalk of adjacent channels, proceed as follows:

1. Follow the procedure in the Overall Distortion test, perform steps 1 through 5.

2. Connect a wave analyzer from the output of CH-1 to CH-2 LINE OUTPUT.

3. Measure the crosstalk in dB.
   Crosstalk should not exceed 55 dB.

4. Repeat steps 1 through 3 for the other channels as required.

If crosstalk specifications are not met, record and reproduce head alignment (height and tape contact) are incorrect or the record or reproduce head is defective.

7-4-(4) ERASURE TEST

It is important that blank bulk-erased tape be used in the erasure test.
To measure depth of erase, proceed as follows:

1. Follow the procedure in the Overall Distortion Test, perform steps 1 through 5.
   A 1000 Hz signal is being recorded at SRL (0 VU).

2. Adjust the LINE INPUT control for a 1000 Hz signal being recorded at 10 dB (+10 VU) above SRL.
   Continue recording for a few minutes.

3. Disconnect the audio oscillator.

4. Rewind and reproduce the recorded section.
   Check and readjust controls of the wave analyzer as necessary for a full scale reading of 100%.

5. Press the RECORD pushbutton to place the recorder in the record mode.
   As the tape is being erased, adjust the percent scale on the wave analyzer to read the residual 1000 Hz tone.

6. Repeat the same procedure for the other channels.

7. The depth of erase should be more than 70 dB.

If erasure specifications are not met, check and adjust the following items.

1. Erase and/or record head alignment, (height, tape contact).
2. Erase head wear.
3. Erase head surface cleanliness.
4. Bias oscillator adjustment.

7-4-(5) TAPE SPEED MEASUREMENT

A flutter test tape is used for measuring tape speed.
Since tape tension affects tape speed, it is important for accurate measurement that the flutter test tape used is attached to the end of a full wound reel of blank tape as shown in Figure 7-2 , and is used with the REEL pushbutton set to the appropriate reel size.
Clean heads, capstan shaft, pinch roller, and all tape guiding components in the tape path before measurement.
Proceed as follows:

1. Place the PITCH CONTROL in the fixed position and set the READY/SAFE pushbutton switches of all channels to the "SAFE" position.

2. Connect a flutter meter with a frequency counter to the LINE OUT and press "REPRO" of the MONITOR SELECT pushbutton switches.

3. Set the SPEED switch to "OUT" HIGH position and use the test tape at 15 ips.

4. Attach the test tape to a 10 1/2 inch NAB reel as shown in Figure 7-2 , place the test tape on the supply reel table, thread the tape, and set the REEL switch to the "OUT" LARGE position.

5. Place the recorder in the play mode and note the reading on the frequency counter.
   The reading should be between 2994 and 3006 Hz (3000Hz±0.2%).

6. Repeat the procedure at a point towards the end of the reel for a 7 inch EIA reel, and for 7 1/2 ips.

7. If adjustment is necessary, refer to Section 6-4.
   If speed accuracy is not within ±0.2%, check and adjust the following items.

1. Pinch roller tire wear and pressure.

2. Brakeshoe for brake drum contact.

3. Power correctness.

4. Pinch roller and capstan cleanliness.

5. Tape tension.

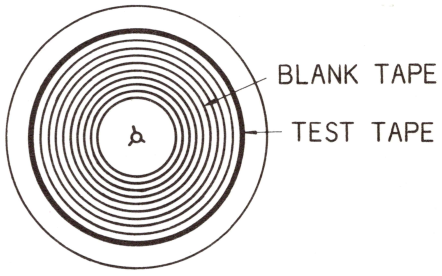

Figure 7-2 Test Tape Loading

In addition, check the following items for the dc servo capstan motor.

6. Servo control circuit.

7. Capstan motor.

NOTE

To avoid a counting error due to the line frequency, it is recommended that the time-base of the frequency counter be set to the crystal oscillator position.

7-4-(6) FLUTTER AND WOW TEST

It is recommended that these checks are made with standard flutter test tapes (See Table 4-2) which are recorded on precise equipment to produce less than 0.03% rms flutter.
After recording a section of tape, rewind to the beginning and start the tape in the reproduce mode.
Flutter meters are sensitive to amplitude modulation that results from poor head-to-tape contact or from signal dropout.
Therefore, clean the heads before making a flutter test.
The following method is used with a test tape:
It is important that the flutter test tape used is attached to the end of a full wound reel of blank tape as shown in Figure 7-2 , and is used with the REEL pushbutton set to the appropriate reel size.

1. Place the PITCH CONTROL to the "IN" fixed position and set the READY/SAFE pushbutton switches of all channels to the "SAFE" position.

2. Connect a flutter meter to the LINE OUT of an inner track channel and press "REPRO" of the MONITOR SELECT pushbutton switches.

3. Set the selector switch of the flutter meter to the NAB weighted position, set the SPEED switch to HI, and use the test tape at 15 ips.

4. Attach the test tape to a 10 1/2 inch NAB reel as shown in Figure 7-2 , place the test tape on the supply reel table, thread the tape, and set the REEL switch to the "OUT" LARGE position.

5. Place the recorder in the play mode and note the reading on the flutter meter.
   The reading should be as shown in Table 7-2 .

6. Repeat the procedure at a point towards the end of the reel, for a 7 inch EIA reel, for 7 1/2 ips.

   The following method is used when a test tape is not available:
   (1) Connect the oscillator signal output (3 KHz) of the flutter meter to an inner channel (not an edge channel) LINE INPUT connector of the recorder.

   (2) Connect the same channel's LINE OUTPUT connector of the recorder to the signal input of the flutter meter.

   (3) Set the SPEED switch to "OUT" HIGH, press "REPRO" of the MONITOR SELECT pushbutton switches, start the record mode, and adjust the appropriate LINE INPUT control.

   (4) Rewind and reproduce the recorded portion, and note the flutter and wow on the flutter meter.

   (5) Check the flutter and wow at a low tape speed, and check it at a point towards the end of the reel.

Table 7-2 Flutter and wow specification

Tape speed	Flutter and wow
15 ips	0.06%
7.5 ips	0.08%

Flutter and wow can be caused by any element in the tape path. Excessive flutter and wow may be traced by observing the flutter component on an oscilloscope screen connected to the demodulator output of the flutter meter.

If the fluctuation rate observed on the oscilloscope coincides with the rotational elements, such as the supply or takeup reel, capstan or pinch roller, the problem source may be easily traced.
Other sources of excessive flutter and wow are:

1. Defective capstan servo control.

2. Damaged capstan motor.

3. Capstan needs lubrication (dry sleeve bearing).

4. Brakeshoe is contacting brake drum.

5. Defective tape reels or tape.

6. Pinch roller tire is worn or has insufficient pressure, or the plunger of the pinch roller solenoid does not reach its bottom.

7. Dirty pinch roller and capstan.

7-5 ACCESS TO ELECTRONICS ASSEMBLY

The record/reproduce electronics assembly can easily be opened for adjustment.
To gain access to the electronics assembly, proceed as follows.

1. Place the equipment in a horizontal position in the middle of the table.

2. Remove the bottom cover by removing the four screws on the cover as shown in Fig. 7-3, remove the four screws on the electronics front panel, as shown in Figure 7-3.

3. Pull the electronics assembly up, rotate it to a horizontal position, and push it to fix it horizontally.

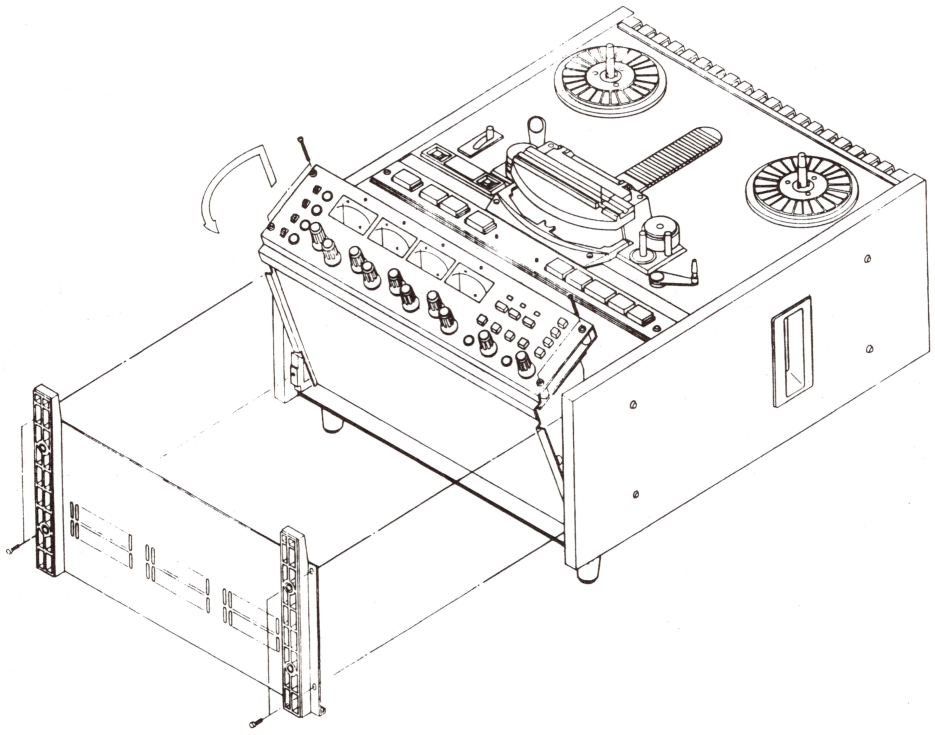

Figure 7-3 Electronics Access

7-6 ELECTRONIC ALIGNMENT

If the previous performance tests were not successful, perform the following applicable reproduce, record, and bias amplifier alignment procedures.

7-6-(1) REPRODUCE SYSTEM

Reproduce system alignments consist of reproduce head azimuth adjustment, frequency response adjustment, SRL (REPRO level) adjustment and SEL/REP. level adjustment.

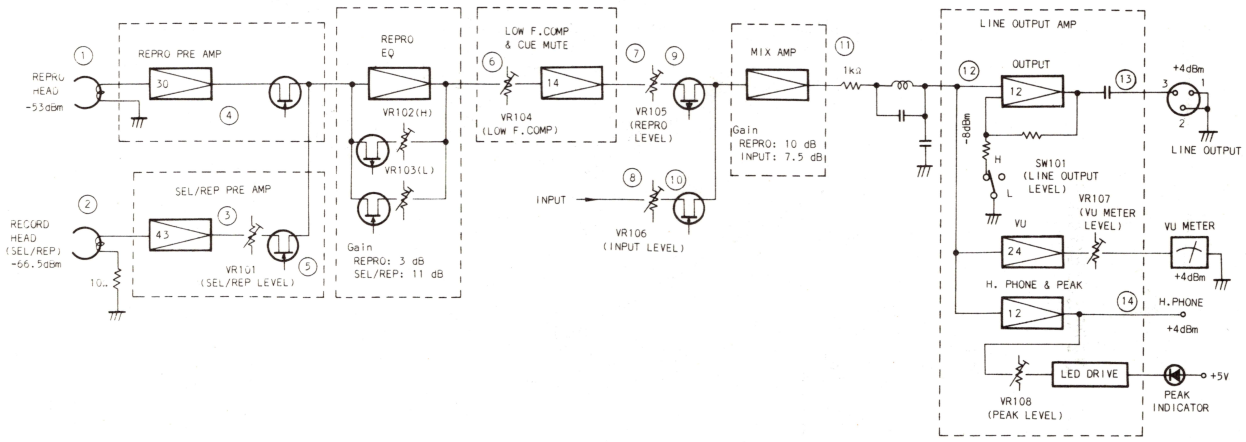

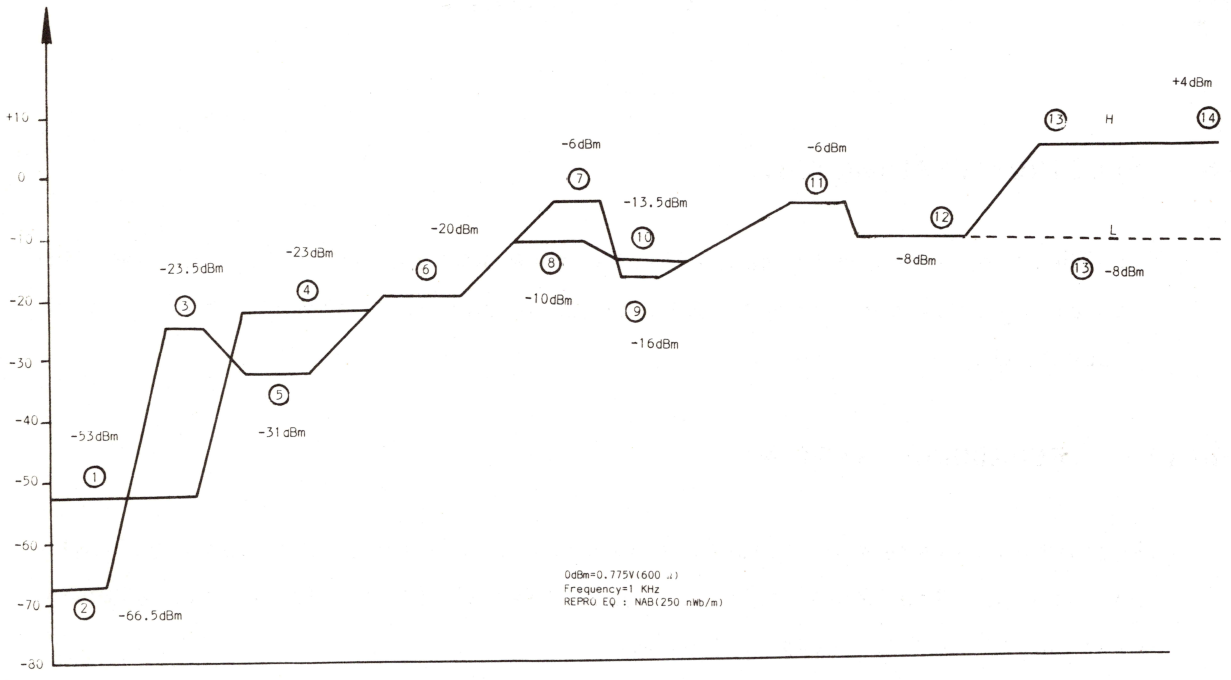

Figure 7-4 Reproduce System Block and Level Diagram

7-6-(2) REPRODUCE HEAD AZIMUTH ADJUSTMENT

Head azimuth adjustment should be made with a "LOW" tape speed (7 1/2 ips) for critical alignment.
Use the test tapes listed in Table 4-3.

1. Thread a low speed test tape, depending on the equalization of the equipment, to the recorder.

2. Connect the ac voltmeter to the LINE OUT connector.

3. Reproduce the coarse azimuth adjustment signal (500 Hz at 7 1/2 ips) of the test tape.

> *CAUTION*
>
> *DO NOT ADJUST ANY OTHER SCREW EXCEPT THE AZIMUTH ADJUSTMENT SCREW (LABELED "A4" IN Figure7-5).*

4. Then, reproduce the fine azimuth adjustment signal (16 KHz at 7 1/2 ips) and adjust the azimuth screw "A4" (nickel plated) for a maximum reading on the ac voltmeter.

5. If a maximum reading cannot be achieved within one full turn of the azimuth screw, a full head alignment may be required.
Refer to section 8 of this manual.

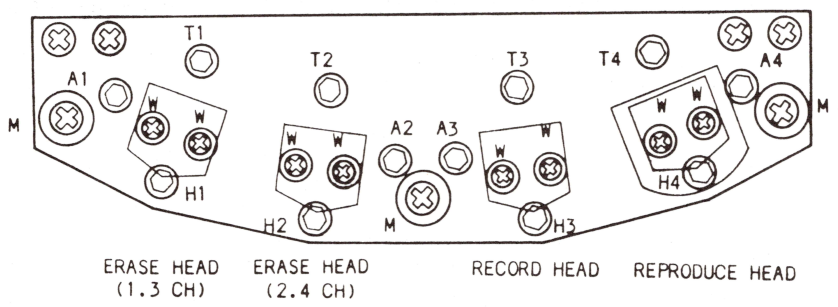

Figure 7-5 Head Assembly

7-6-(3) FREQUENCY RESPONSE

Since the reproduce equalizer circuit has high frequency independent controls for both 15 ips and 7 1/2 ips, an adjustment is made at first for 15 ips.
Table 7-3 shows the time constant and fluxivity at each equalizer.

1. Connect the ac voltmeter to the LINE OUTPUT connector.

2. Thread the test tape through the equipment.

For 15 ips:

3. Reproduce a 500 Hz signal on the test tape.
   At this time the value on the ac voltmeter is decided as standard.

4. Reproduce the frequency response test signal (from 31.5 up to 20 KHz) and note the reading on the ac voltmeter.

5. Adjust the VR 102 adjustment controls with a frequency of 10 KHz for a 0 dB reading on the ac voltmeter.
   The reading should be 31.5 Hz to 20 KHz ±2 dB.

For 7 1/2 ips:

6. Repeat steps 2 and 4 to at 7 1/2 ips tape speed.

7. Adjust the VR 103 adjustment controls with a frequency of 10 KHz for a 0 dB reading on the ac voltmeter.
   The reading should be 31.5 Hz to 16 KHz ±2 dB.

8. Repeat steps 1 through 7 for the other channels as required.

Adjust VR 104
For Low Freq Compensation
adjust 50 Hz to match 500Hz level

Table 7-3 Equalizer Time Constants & Fluxivity

Equalization	Time Constants	Fluxivity
NAB 15 ips	3180 + 50 μsec	* 250 nWb/m
IEC 15 ips	∞ + 35 μsec	**320 nWb/m
NAB 7 1/2 ips	3180 + 50 μsec	* 250 nWb/m
IEC 7 1/2 ips	∞ + 70 μsec	**320 nWb/m

* short circuit flux

** open circuit flux

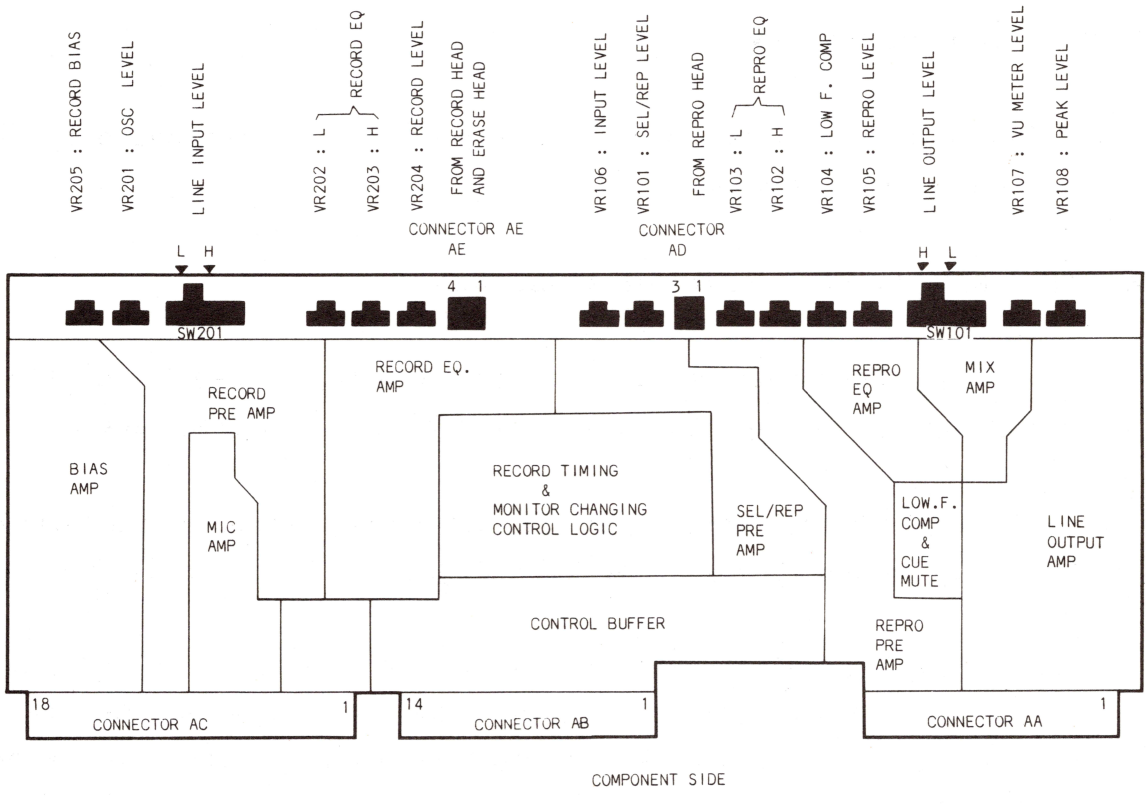

Figure 7-6 Location of Record/Reproduce Electronics

7-6-(4) SRL (REPRO LEVEL) ADJUSTMENT

1. Connect the ac voltmeter to the LINE OUTPUT connector.

2. Thread the 15 ips test tape through the equipment.

3. Reproduce the reference recorded flux on the test tape and adjust the VR 105 adjustment controls for a +4 dBm reading on the ac voltmeter, (LINE OUTPUT LEVEL switch is in "H" position).

7-6-(5) SEL/REP. LEVEL ADJUSTMENT

1. Depress the SEL/REP pushbutton switch of MONITOR SELECT.

2. Reproduce the reference recorded flux and adjust the VR 101 adjustment controls for a +4 dBm reading on the ac voltmeter.

7-6-(6) RECORD SYSTEM

Before performing record system adjustments, a reproduce system adjustment must be made.

7-6-(7) RECORD HEAD AZIMUTH ADJUSTMENT

The head azimuth may be adjusted at a low tape speed for critical head alignment and at 10 dB below the standard recording level.

1. Connect the ac voltmeter to the LINE OUTPUT connector and connect the audio oscillator to the EXT OSC jack.

2. Set the TEST OSC switch to the EXT OSC, the LINE OUTPUT LEVEL switch to the HIGH position, the LINE INPUT LEVEL switch to the LOW position, and depress the REPRO pushbutton switch of MONITOR SELECT.

3. Thread a blank tape through the equipment.

4. Set the audio oscillator frequency to 1 KHz.

5. Place the equipment in the record/reproduce mode and adjust the LINE INPUT control for -6 dBm on the ac voltmeter.

6. Adjust the record head azimuth screw "A3" for a maximum reading on the ac voltmeter at a frequency of 15 KHz for 7 1/2 ips record/reproduce mode.

CAUTION

DO NOT ADJUST ANY OTHER SCREW EXCEPT THE AZIMUTH ADJUSTMENT SCREW (LABELED "A3" IN Figure 7-5)

7. If a maximum reading can not be achieved within one full turn of the azimuth screw, or a maximum reading on the ac voltmeter is well below -6 dBm, a full head alignment may be required. Refer to section 8 of this manual.

7-6-(8) RECORD BIAS ADJUSTMENT

Figure 7-7 shows the variation of the frequency response by the bias set, the RECORD EQ, and low frequency compensation adjustment control.
Figure 7-9 shows the characteristics of the bias current v.s.output and distortion of Scotch #226 tape.
The record bias should be set at 3 dB over bias at 10 KHz for low distortion and high maximum output level (MOL).
The overall frequency response may be adjusted with both the RECORD EQ, the RECORD BIAS, and LOW F.COMP. adjustment controls for a flat frequency response curve.

1. Set the tape speed to 15 ips, and depress the REPRO pushbutton switch of MONITOR SELECT.

BIAS ADJUSTMENT AT 10 KHz

2. Record and reproduce the 10 KHz signal of the TEST OSC and adjust the LINE INPUT control for a +4 dBm reading on the ac voltmeter.

3. Adjust the RECORD BIAS adjustment controls (VR 205) for a peak indication on the ac voltmeter and then turn the RECORD BIAS adjustment controls clockwise until a decreased level of 3.0 dB is obtained.
   The standard biasing point of the MX-5050 BQII is at 3.0 dB overbias at 10 KHz for 15 ips.

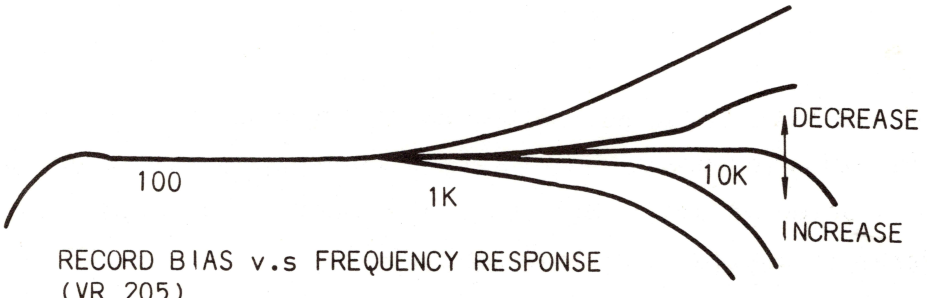

RECORD BIAS v.s FREQUENCY RESPONSE
(VR 205)

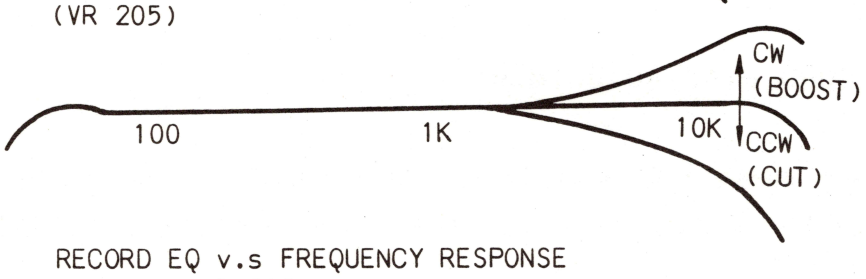

RECORD EQ v.s FREQUENCY RESPONSE
(VR 202, VR 203)

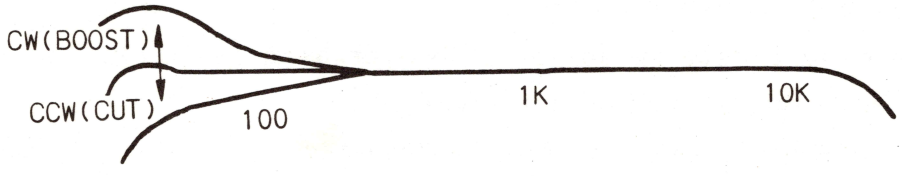

LOW FREQUENCY COMPENSATION v.s FREQUENCY RESPONSE
(VR104)

Figure 7-7 Overall Frequency Response

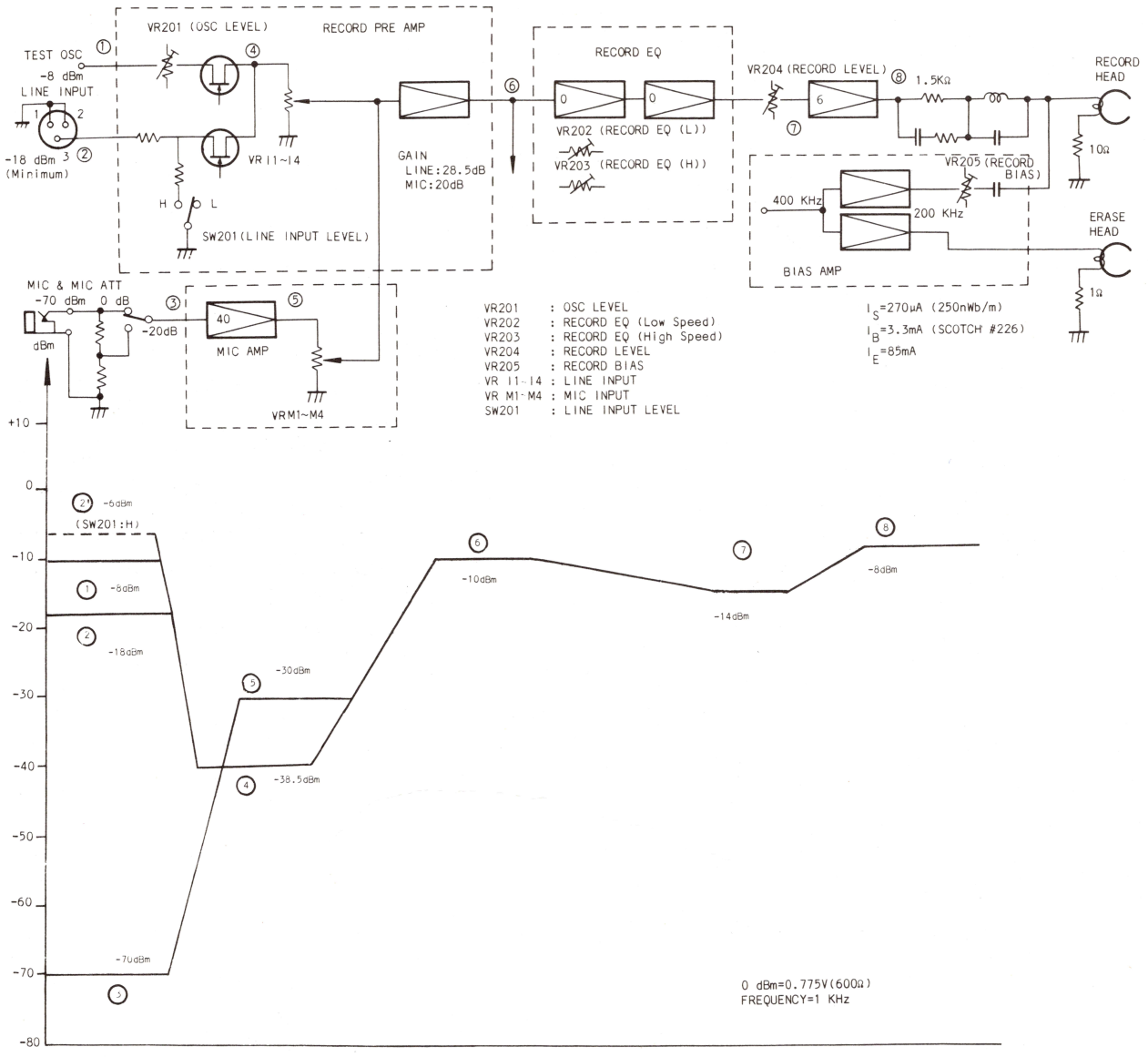

Figure 7-8 Record System Block and Level Diagram

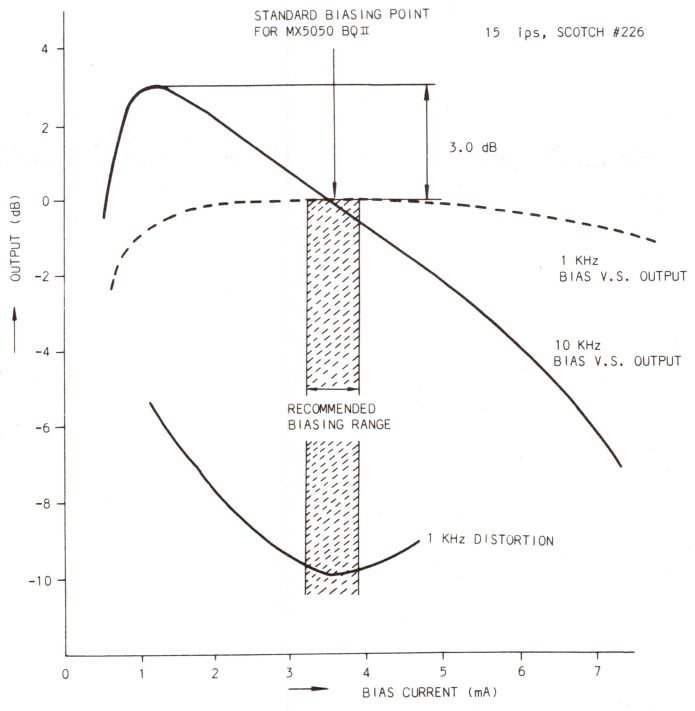

Figure 7-9 Bias Current v.s. Output and Distortion

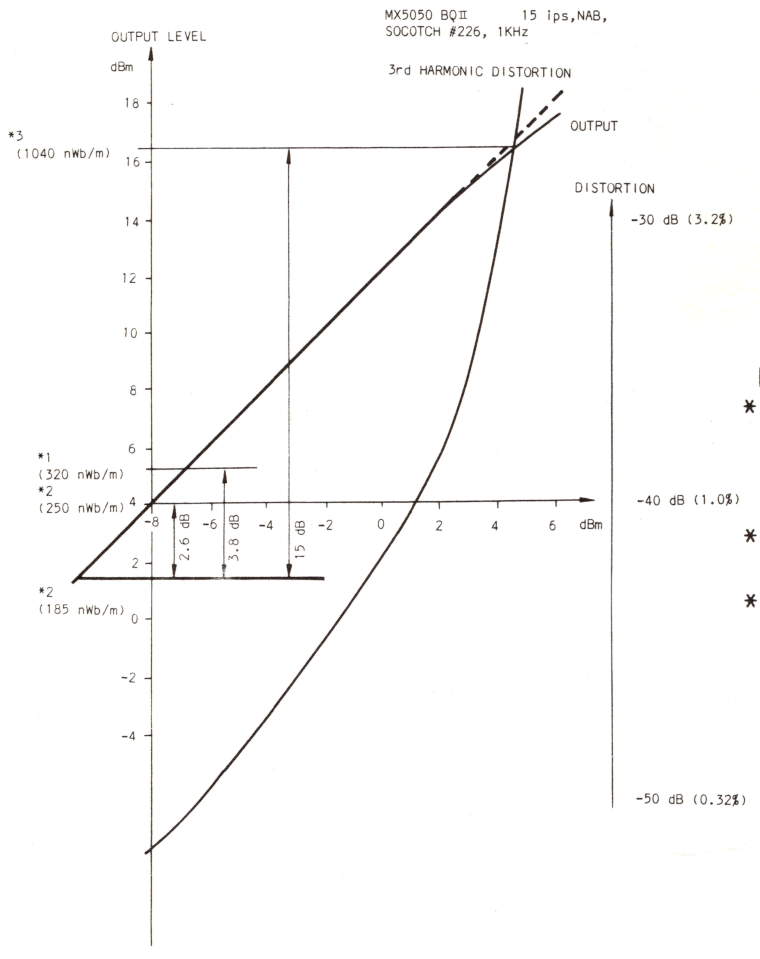

NOTE

*1 : 320 nWb/m : DIN REFERENCE LEVEL
This is "open circuit flux" and corresponds to 290 nWb/m of "short circuit flux".

*2 : 250 nWb/m, 185 nWb/m
These are "short circuit flux".

*3 : 1040 nWb/m : Reference level for signal to noise ratio measurement and trigger level for peak indicator.

Figure 7-10 Input v.s. Output and Distortion

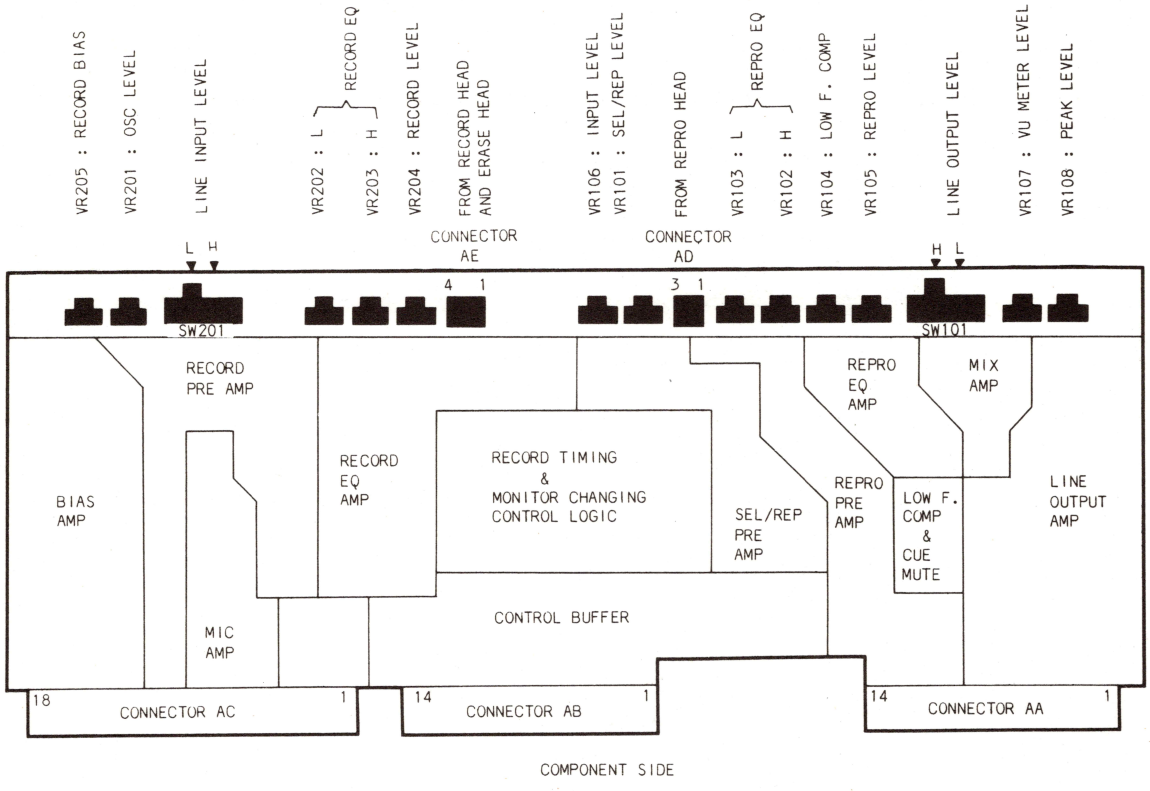

Figure 7-11 Location of Record/Reproduce Electronics

7-6-(9) OVERALL FREQUENCY RESPONSE

At 15 ips, overall frequency response is measured at SRL (0 VU), and at 7 1/2 ips, it should be measured at least 10 dB (-10 VU) below SRL.
The overall frequency response is affected by the biasing.
Refer to 7-6-(8) RECORD BIAS ADJUSTMENT to adjust the record biasing.
RECORD EQUALIZER adjustment controls HIGH (VR 203) and LOW (VR 202) relate to the HIGH and LOW of the SPEED switch.

1. Connect the audio oscillator to the EXT OSC jack.
   Set the TEST OSC switch to the EXT OSC, and connect the ac voltmeter to LINE OUTPUT.

2. Depress the REPRO pushbutton switch of MONITOR SELECT, and place the LINE OUTPUT LEVEL switch in the HIGH position.

3. Place the equipment in the record mode.

For 15 ips:

4. Feed a 1 KHz signal, and adjust the LINE INPUT control to obtain +4 dBm reading on the ac voltmeter.

5. Shift the frequency to 10 KHz and adjust the RECORD EQ HIGH adjustment controls (VR 203) to obtain a +4 dBm reading on the ac voltmeter.

6. Shift the frequency to 100 Hz and adjust the LOW F. COMP. (Low Frequency Compensation) adjustment controls (VR 104) to obtain a +4 dBm reading on the ac voltmeter.

7. Vary the frequency from 30 Hz to 20 KHz and confirm that the frequency response is within the specifications.
   The frequency response specification should be 30 Hz to 20 KHz $\pm$2 dB.

For 7 1/2 ips:

8. Shift the frequency to 1 KHz and adjust the LINE INPUT control to obtain a -6 dBm (-10 VU) reading on the ac voltmeter with the record mode.

9. Shift the frequency to 10 KHz and adjust the RECORD EQ. LOW adjustment controls (VR 202) to obtain a -5.5 dBm reading on the ac voltmeter.

10. Vary the frequency from 20 Hz to 18 KHz and confirm that the frequency response is within the specifications.
The frequency response specification should be 20 Hz to 18 KHz ±2 dB.

NOTE

If the specified frequency response characteristics were not obtained in the above procedures, adjust the record biasing within the recommended biasing range (from 2.5 dB to 3.5 dB over bias at 10 KHz).

7-6-(10) MONITOR INPUT LEVEL and VU METER LEVEL ADJUSTMENT

1. Connect the audio oscillator to the EXT OSC jack and set the TEST OSC switch to the EXT OSC, and feed a 1 KHz for a -18 dBm signal.

2. Depress the INPUT pushbutton switch of MONITOR SELECT and place the LINE INPUT LEVEL switch in the LOW position, and turn the LINE INPUT controls fully clockwise.

3. Adjust the VR 106 to obtain a +4 dBm reading on the ac voltmeters.

4. Then, adjust the VR 107 to obtain a 0 dB indication on the VU meters.

5. Verify that the values shown in Table 7-4 are obtained on each "H" and "L" position of the LINE INPUT LEVEL switch and LINE OUTPUT LEVEL switch.

Table 7-4 Standard Level

Minimum INPUT			VU Meter	OUTPUT		
SW	H	-6 dBm	0 dB	SW	H	+4 dBm
201	L	-18 dBm	(0 VU)	101	L	-8 dBm

SW101: LINE OUTPUT LEVEL Switch
SW201: LINE INPUT LEVEL Switch

7-6-(11) TEST OSC LEVEL ADJUSTMENT

Before making this adjustment, the monitor input level adjustment should be completed.

1. Shift the audio oscillator 1 KHz level to -8 dBm and adjust the LINE INPUT controls for a 0 dB indication on the VU meter.

2. Set the TEST OSC switch to the 1 K position and adjust TEST OSC LEVEL adjustment control (VR 201) for 0 dB on the VU meter.

3. Set the TEST OSC switch to the 10 K position and adjust VR 501 on the Amplifier Control P.C.B. (shown in Figure 7-12) for 0 dB on the VU meter.

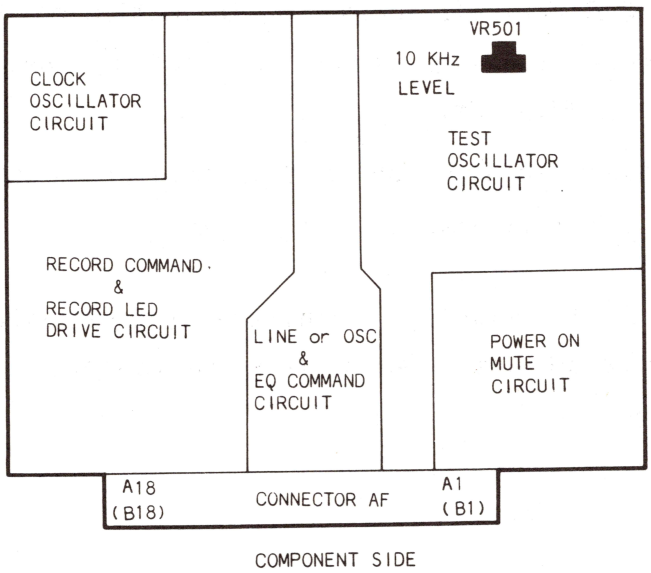

Figure 7-12 Location of AMP. Control Electronics

7-6-(12) RECORD LEVEL ADJUSTMENT

A record level adjustment should be made whenever the tape used with the equipment is changed and the head is replaced.

1. Set the SPEED selector switch to HIGH and depress the INPUT pushbutton switch of MONITOR SELECT.
2. Set the TEST OSC switch to 1 KHz and adjust the LINE INPUT controls to obtain a 0 dB indication on the VU meter.
3. Depress the REPRO pushbutton switch of MONITOR SELECT and place the equipment in the record mode.
4. Adjust the RECORD LEVEL adjustment controls (VR 204) to obtain a 0 dB indication on the VU meter (record/reproduce output level).

7-6-(13) PEAK INDICATOR TRIGGER LEVEL ADJUSTMENT

Peak indicators are triggered at the recorded flux level of 1040 nWb/m.
This point is 15 dB above 185 nWb/m, 12.4 dB above 250 nWb/m, and 11.2 dB above 320 nWb/m as shown in Figure 7-10.

1. Set the LINE INPUT LEVEL switch to the "L" position, the LINE OUTPUT LEVEL switch to the "H" position, TEST OSC switch to the LINE position, connect the audio oscillator to the EXT OSC jack. Set the TEST OSC switch to the EXT OSC, and feed a -8 dBm 1 KHz signal.
2. Depress the INPUT pushbutton switch of MONITOR SELECT and adjust the LINE INPUT controls for a 0 dB indication on the VU meter.
3. For NAB equalization, shift the feeding level of the audio oscillator to +4.4 dBm.
4. For IEC equalization, shift the feeding level of the audio oscillator to +3.2 dBm.
5. Turn the VR 108 adjustment controls fully counterclockwise and then clockwise until each peak indicator in the VU meter illuminates.

SECTION 8
MAJOR COMPONENT REPLACEMENT

Prior to replacing major components perform all the steps for access to the transport.

8-1 REEL MOTOR ASSEMBLY REPLACEMENT

8-1-(1) REEL TABLE REPLACEMENT AND HEIGHT ADJUSTMENT

The reel table may be removed by removing the three cross-recessed screws accessible from the front of the transport.
To adjust the reel table height, loosen the two hex socket head screws in Figure 8-1, adjust the height and retighten the screws.

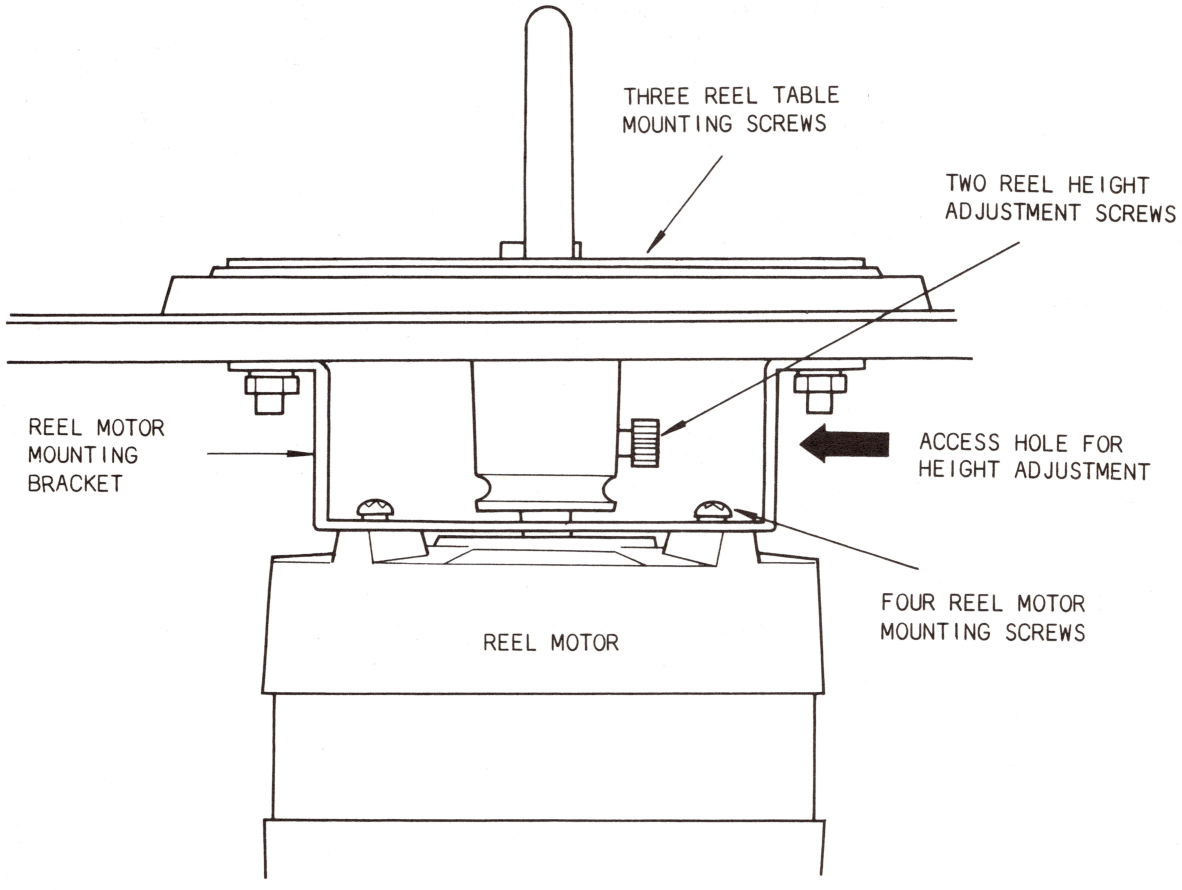

Figure 8-1 Reel Motor Mounting

8-1-(2) REEL MOTOR REPLACEMENT

To replace the supply or takeup motor proceed as follows:

1. Loosen the two hex socket head screws on the reel shaft holder (Figure 8-1) and remove the reel table and holder.
2. Tag and unsolder the motor leads attached to the printed circuit board.
3. Remove the four motor mounting cross-recessed screws, accessible from the front of the transport.
4. Remove the brake assembly and the brake drum by removing the four brake assembly mounting screws and two hex socket head screws on the bottom of the reel motor as shown in Figure 8-2 .

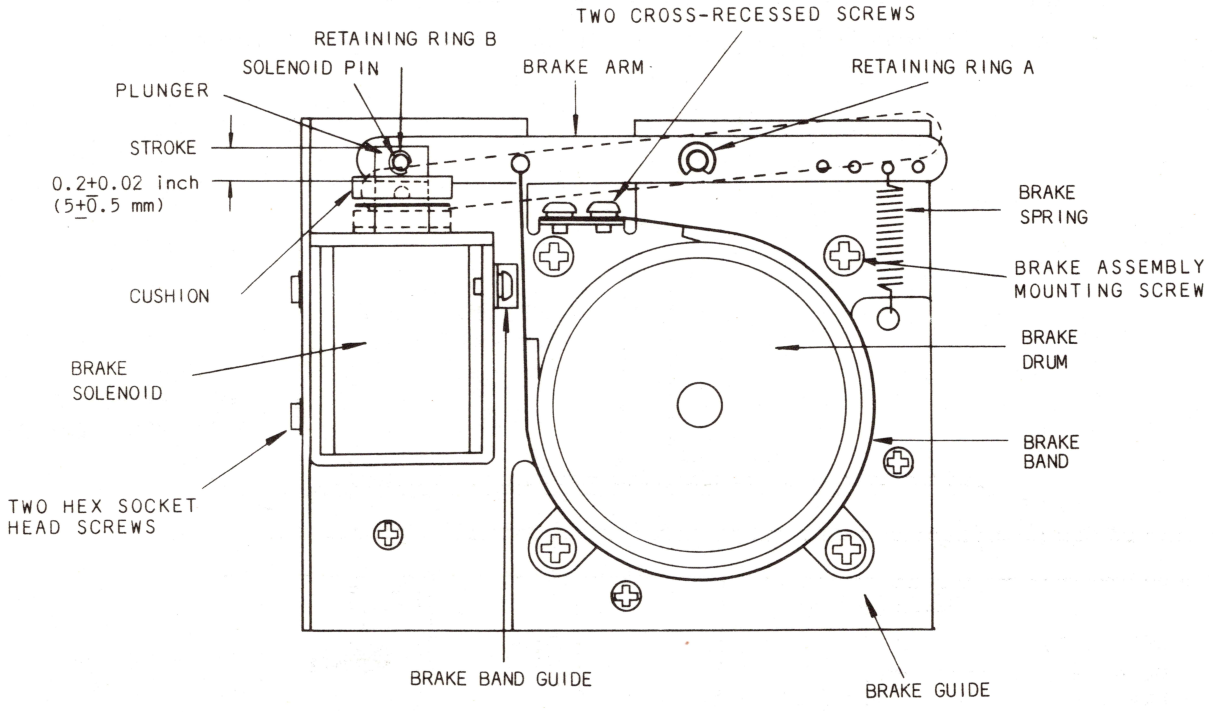

Figure 8-2 Brake Assembly

8-1-(3) BRAKE ARM ASSEMBLY AND BRAKE SOLENOID REPLACEMENT

When a new brake arm assembly or new brake solenoid is installed (Figure 8-2), it is necessary to position the brake guide and/or brake solenoid to ensure uniform brake band clearance around the brake drum when the solenoid is energized.
Also, the brake solenoid plunger must bottom in the solenoid housing when the solenoid is energized.
When the solenoid is de-energized, the brake band should uniformly contact the drum surface.
After installation, perform the brake adjustment procedure in Section 6 of this manual.
After completion of the adjustments, place the recorder in the play mode for 30 minutes.
Then press the STOP and PLAY pushbuttons alternately to ensure that the solenoid bottoms when it is hot.

To replace the brake arm assembly, proceed as follows:
The brake arm assembly consists of the brake arm and the brake band.

1. Remove the retaining rings "A" and "B", and remove the brake spring.

2. Remove the two cross-recessed screws, and replace the brake arm assembly.

To replace the brake solenoid, proceed as follows:

1. Remove the brake spring.

2. Remove retaining ring B on the solenoid pin and remove the solenoid pin.

3. Remove the solenoid housing and plunger by removing the two hex socket head screws.

4. Install a new solenoid housing and plunger and adjust the solenoid for a 5 + 0.5mm (0.2 ±0.02 inch) plunger stroke by loosing the two hex socket head screws.

8-2 POWER TRANSFORMER REPLACEMENT

To replace the power transformer (refer to EXPLODED VIEW), proceed as follows:

1. Tag transformer leads and disconnect the three transformer connectors.

2. Remove the four M4 nuts that secure the transformer to the transport.

3. Install a new transformer in the reverse order of removal, and connect the three transformer connectors.

8-3 CAPSTAN MOTOR REPLACEMENT

The capstan motor should be replaced along with the servo control printed circuit board assembly.
To replace the capstan motor proceed as follows:

1. Remove the two hex socket head screws on the head housing cover, and remove the three flat head socket cap screws under the cover. Remove the dust cap from the capstan by turning the dust cap counterclockwise.

2. Remove the connector on the servo control printed circuit board assembly located above the capstan.

3. Remove the servo control printed circuit board assembly and its mounting plate by turning the two M4 cross-recessed screws (D) and the four cross-recessed screws (B) on the mounting plate.

4. Remove the capstan mounting plate and capstan motor by removing the four M4 cross-recessed screws (A) on the mounting plate.

5. Remove the capstan motor by removing the three M4 cross-recessed screws (C) on the mounting plate and install a new capstan motor assembly in the reverse order of removal.

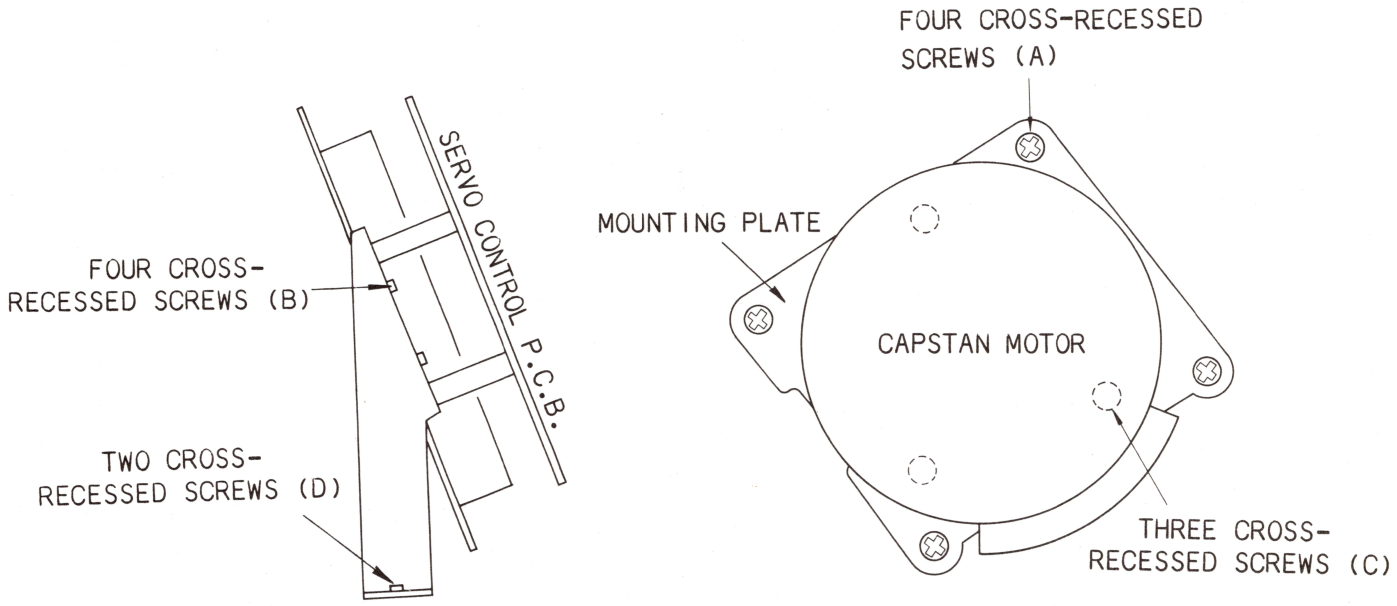

Figure 8-3 Location of DC Servo Capstan Motor

8-4 PINCH ROLLER REPLACEMENT

To replace the pinch roller assembly proceed as follows:

1. Remove the pinch roller cap by removing the flat head socket cap screw.

   NOTE: There are polyslider washers on both sides of the pinch roller.

2. Install a new pinch roller, the polyslider washers, and pinch roller cap in the reverse order.

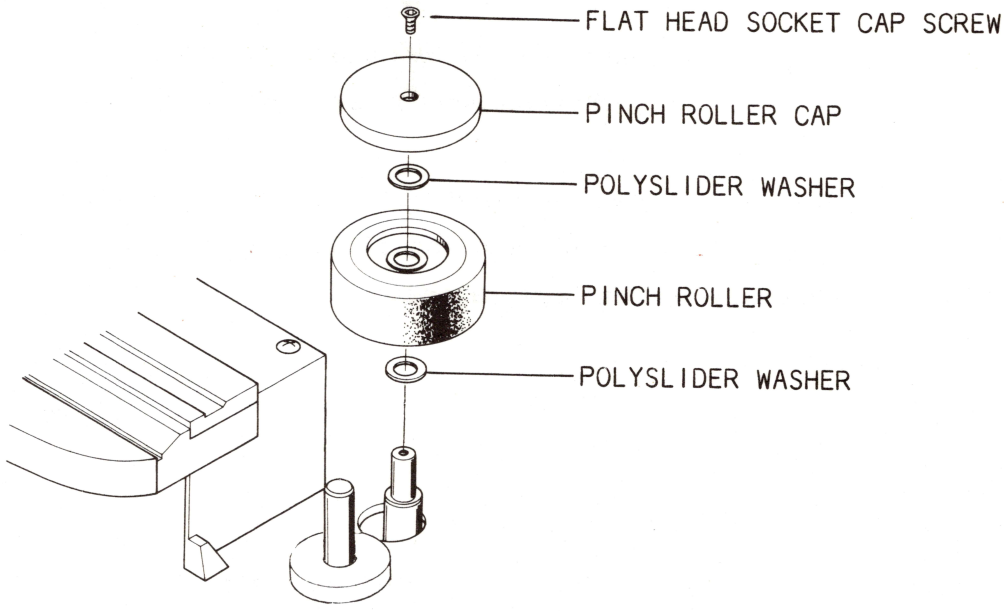

Figure 8-4 Pinch Roller Removal

8-5 HEAD ASSEMBLY REPLACEMENT

This section provides a description of the head assembly, the procedure for changing the head stack, and the adjustment procedure for adjusting head azimuth (tilt), head height, head zenith (perpendicularity), and tape wrap (racking).
These adjustments are required whenever a head stack is replaced.

8-5-(1) DESCRIPTION

The head assembly is mounted on three tape-guide posts and secured in place by the three screws labeled "M" in Figure 8-5 .
Each head stack is secured to a bracket by the screws labeled "W" with a spacer between the bracket and the head stack.
Each bracket is suspended from the head base by the three spring-loaded screw labeled "H", "A", and "T".
Screws labeled "W" are used to adjust tape wrap.
Screws labeled "H", "A", and "T" are used to adjust height, azimuth, and zenith.
A head stack may be removed and re-lapped (face resurfaced) if the amount of wear is small and only an indication of poor head-to-tape contact is evident.

Poor contact is the result of improper adjustment and is evidenced by the loss of high frequency response of the record or reproduce head, difficulty in achieving bias peak (record head), and insufficient erase head erasure.

8-5-(2) HEAD STACK REPLACEMENT

To change a head stack, proceed as follows:

1. Lift the head cover and disconnect the ac power cord.

2. Remove the three screws labeled "M" and pull the head assembly out from the head connector.

3. Tag and unsolder (use a low wattage pencil type iron to prevent damage) the leads at the rear terminal of the head stack.

4. Remove the head stack by removing the three screws labeled "A", "T", and "H".

5. Install a new head stack and resolder the leads.

6. As a preliminary adjustment, measure the distance between the head base and the bracket at a point near spring-loaded screws "A", "T", and "H".
   If necessary adjust the screws for equal spacing.

7. Paint the head face with a soft crayon, run the tape for about ten seconds, and check the crayon rubbed away by the tape.
   If tape wrap is incorrect, adjust the wrap by loosening the screws labeled "W" as shown in Figure 8-5 .

Head alignment and the following adjustments are necessary whenever the head is replaced.

1. For reproduce head replacement.
   A. Reproduce equalization adjustment.
   B. SRL adjustment.

2. For record head replacement.
   A. Record bias adjustment.
   B. Overall frequency response adjustment.
   C. Record level adjustment.

3. For erase head replacement.
   A. Record bias adjustment.

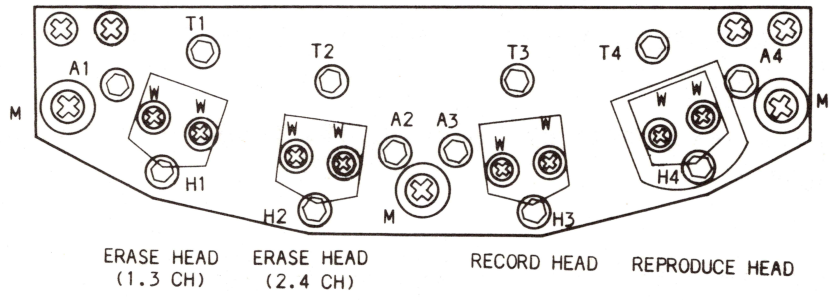

Figure 8-5 Head Assembly

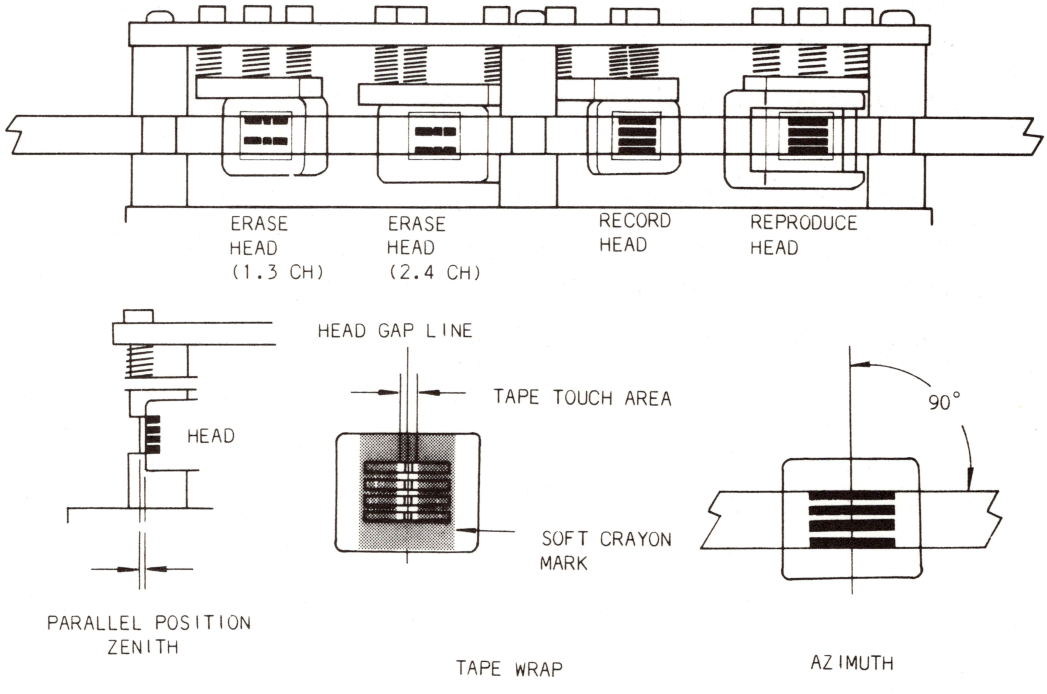

Figure 8-6 Head Alignment

8-5-(3) RECORD AND REPRODUCE HEAD ADJUSTMENT

Follow the procedure for reproduce system adjustment given in Section 7 of this manual.

For the final adjustment of a record head stack, height and azimuth adjustment may be accomplished in the same manner as for a reproduce head stack, by playing back an alignment tape with the equipment in the selective reproduction mode.

8-5-(4) ERASE HEAD ALIGNMENT

Erase head azimuth is not critical, however wrap angle and head height relative to the record head are important to achieve maximum efficiency.

Poor erasure is often caused by misalignment of the erase head.

Before making any attempt to adjust the erase head stack, an entire electronic alignment procedure (reproduce, record, and bias alignment) should be performed so that the record and reproduce head height are correct, the SRL adjustment is correct, and bias and record levels are properly calibrated.

A temporary erase head adjustment can be accomplished by using a headset or a speaker/amplifier.

However, for precise alignment, a wave analyzer should be used.

Proceed as follows:

1. Follow the procedure for erasure test steps 1 through 6 given in Section 7-4-(4).

2. Observe the reading on the wave analyzer and turn screw "H" (Figure 8-5) 1/4 turn clockwise.
   If the reading decreases, turn the screws "A" and "T" 1/4 turn clockwise.
   If the reading increases when "H" is turned 1/4 turn clockwise, turn "H" counterclockwise past the original setting to 1/4 turn counterclockwise.
   If the reading decreases, turn screws "A" and "T" counterclockwise by the same amount.

3. Repeat step 2 in small increments to achieve a minimum reading on the wave analyzer.
   Typical amount of erasure should be 70 dB or better.

   NOTE: After screw "H" is turned, be sure to turn screws "A" and "T" the same amount.

4. If adjustment of the erase head height alone does not achieve satisfactory erasure, set screws "H", "A", and "T" for a minimum reading on the wave analyzer.
   Note that there are two gaps on the face of the erase head.
   The trailing gap has the best effect on erasure and must have good contact with the tape.
   Loosen screws "W" slightly and rotate the erase head stack for a minimum reading on the wave analyzer.
   Tighten screws "W".

SECTION 9
TROUBLESHOOTING

9-1 PRELIMINARY PROCEDURES

If a problem should occur with the tape recorder, check that the following items are correct before proceeding.
As an aid in troubleshooting, refer to the following section and the schematic diagrams and parts lists included in this manual.

1. Head stacks are cleaned and demagnetized.
2. Head azimuth and height are correct.
3. Record bias has been adjusted properly.
4. Recommended tape has been used.
5. Input and output connectors are correctly wired.
6. AC line voltage tap is set to the correct value.
7. All operational switches have been correctly set.
8. Adjustment procedures have been correctly made using accurate test equipment.

9-2 TROUBLESHOOTING HINTS

Some of the more common problems, points to confirm and possible causes are listed in Table 9-1 and 9-2.
When a problem occurs, first, confirm cirtain points, and if the problem does not resolve itself, inspect other possible causes.

Table 9-1 Troubleshooting Hints for Amplifiers

Item	Symptom	Items to be checked	Defective parts
1	Record does not function.	Examine the READY/SAFE switch, input & output connector, head cords sand consult operational procedures.	RL301 or Q301 on PB-14Z or PB-151 is defective.
2	SEL/REP does not function.	Examine the MONITOR SELECT switch position, and consult operational procedures.	RL301 or Q301 on PB-14Z or PB-151 is defective.
3	Bias level is not high enough.	Examine bias level, and resonance peak.	Q209,210,211 or 212 on PB-14Z or PB-151 is defective.
4	Output level is not high enough.	Examine the LINE OUTPUT LEVEL switch position.	IC103 or 104 on PB-14Z or PB-151 is defective.
5	TEST OSC does not function.	Examine the MONITOR SELECT and TEST OSC switch position.	IC501 or 502 on PB-45E is defective.

Table 9-2 Troubleshooting Hints for Transport

Item	Symptom	Items to be checked	Defective parts
1	Transport does not function.	Examine the POWER switch, Power cord, fuses, Power receptacle.	IC4 or 9 is defective on CB-317.

Item	Symptom	Items to be checked	Defective parts
2	NO PLAY, F.FWD or RWD mode function.	Examine tape threading tension arm positions and EDIT switch.	IC1, Q4,6,7,8,9,10,11 14,15,16 or 18 on PB-44S is defective.
3	Record does not function or Record indicator does not light up.	Examine operational procedures.	IC1 or Q2 on PB-44S is defective.
4	EDIT does not function or EDIT indicator does not light up.	Examine operational procedures.	IC1 or 33 on PB-44S is defective.
5	Timer does not function.	Examine tape threading and tension arm positions.	IC2,3,32 or 33 on PB-44S is defective. Photo interrupter on PB-82M is defective.
6	Pinch roller does not function.	Examine looseness of nuts.	Q11, 14 or 18 on PB-44S is defective.
7	Brake does not function.	Examine the stroke of the Brake solenoid and smooth motion of the Brake arm.	Q4, 11, 15 or 16 on PB-44S is defective.
8	Capstan does not rotate or speed is incorrect.	Examine the connector of capstan motor P.C. Board, tension arm positions, pitch control knob position, and speed switch position.	Q5 on PB-44S is defective. Capstan motor or capstan motor P.C.Board is defective.

SECTION 10
PARTS LISTS AND SCHEMATICS

When ordering parts, the part number must be specified.
Components which do not have part numbers should be specified by a reference number.
Concerning components on the printed circuit boards, those which have part numbers should be specified by their respective part number, and those which do not have part numbers should be specified either by their assembly name or reference numbers.

NOTE

The part numbers in parenthesis are included in the assembly numbers indicated in the "Notes" next to "Part No.", therefore, those parts must be specified by the assembly numbers.

10-1 SAFETY COMPONENTS

For safe operation, components specified by the symbol ⚠, in the circuit diagram, must not be replaced with ones of a different type. These safety components are also listed on Table 10-1.

Table 10-1 Safety Component

Ref. No.	Description	Part No.	Assembly	Notes
2-9	Transformer, Power	TF11059	CHASSIS Ass'y	
2-15	Fuse, 1A, φ5.2	FH7F010	"	Control P.C. Board Ass'y (PB-44S)
	Fuse, 2A, φ5.2	FH7F020	"	
	Relay, Reel Motor switching	RY1DC029	"	
	Resistor, 18 ohm, 3W	R8DJ180M	"	
	11 ohm, 3W	R8DJ110M	"	
	5.1 ohm, 3W	R8DJ5R1M	"	
	100 ohm, 5W	R93-002K	"	
	Spark Killer 0.1μF+120 ohm (250 WV)	CZ20001W	"	
	Connector, 3P } pair, MB	CN403031	"	
	" 3P }	CN403075	"	
	" 6P } pair, MA and	CN406035	"	
	" 6P } MC	CN406077	"	
4-7	Capacitor, Reel Motor, 6.5μF (250 WV)	PB-73R	Reel Ass'y	
	P.C. Board, Capacitor			
6-10	P.C. Board Ass'y, Power Switch	PB-76C	Control Switch Ass'y	
	Fuse, Power Supply, 2A	FH7E020	"	
	Spark Killer, 0.033μF+120 ohm (250 WV)	CZ20004W	"	
	Spark Killer 0.1μF+120 ohm (250 WV)	CZ20001W	"	
	Switch, Push, POWER SPEED REEL	WH12008	"	
8-2	Receptacle, A.C.Inlet, Power	CN603012	Connector Panel Ass'y	
	Power Cord	PZ9D003		

10-2 ASSEMBLY HARDWARE CODING

All screws conform to ISO standard, and have a cross-recessed head, unless otherwise noted.
ISO screws have a point inscribed in the head as in the following figure.

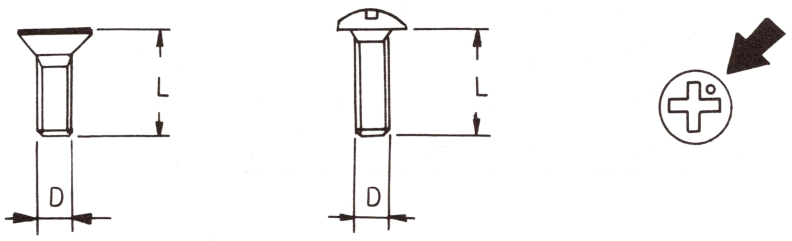

EXAMPLE OF SCREW

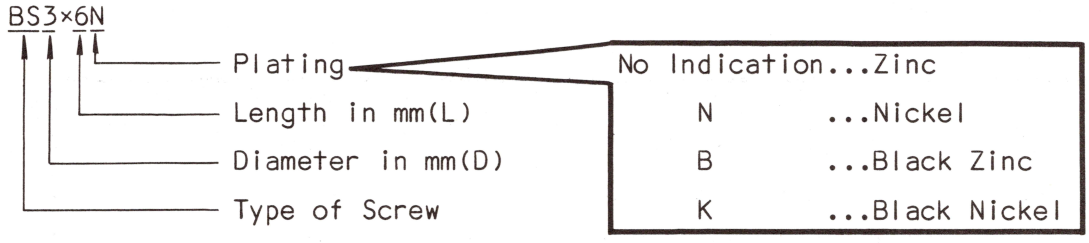

EXAMPLE OF WASHER

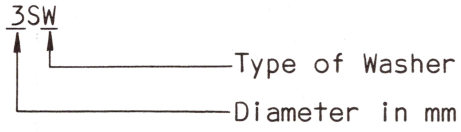

No.	Code	Full Name
1	BS	Bind SEMS Screw
2	PS	Pan SEMS Screw
3	TS	Triple Screw
4	B	Binding Head Screw
5	P	Pan Head Screw
6	F	Flat Countersunk Head Screw
7	O	Oval Countersunk Head Screw
8	H	Hex Head Bolt
9	T	Truss Head Screw

No.	Code	Full Name
10	C	Hex Socket Head Screw
11	S	Hex Socket Headless Set Screw
12	W	Flat Washer
13	SW	Spring Washer
14	N	Hex Nut
15	LW	Lock Washer
16	K	Knop Washer
17	FW	Fiber Washer
18	FC	Flat Head Socket Cap Screw
19	BC	Button Head Socket Cap Screw

10-3 PARTS LISTS AND EXPLODED VIEW

1. HEAD ASSEMBLY

Ref.No.	Description	Part No.	Notes
1-1	Head Housing Ass'y	KH-4Y-A	
1-2	Stud, Head Housing Ass'y	KH4Y005	
1-3	Plate, Head Mount Base	KH0C019	
1-4	Bracket, L, P.C. Board	KH4Y002	
1-5	Bracket, R, P.C. Board	KH4Y003	
1-6	P.C. Board Ass'y, Head	PB-76E	
1-7	Spring, Head, 6mm	GS2016	
1-8	Spring, Head, 8mm	GS2015	
1-9	Head, Erase, 4T/2CH	GH4E058A	
1-10	Head, Record, 4T/4CH	GH4R034D	
1-11	Head, Reproduce, 4T/4CH	GH4P011E	
1-12	Plate, Trim, Head Housing Ass'y	KH0F038	
1-13	Cover, Front, Head Housing Ass'y	KH0F037	
1-14	Guide, Head	KG4C002	
1-15	Connector, Head P.C. Board	CN328005	
1-16	Bracket, Connector	KH4Y004	
1-17	Plate, Shield	KH4Y001A	
1-18	Washer, Polyslider, $\phi 3 \times t0.5$	F524-3	

EXPLODED VIEW 1. HEAD ASSEMBLY

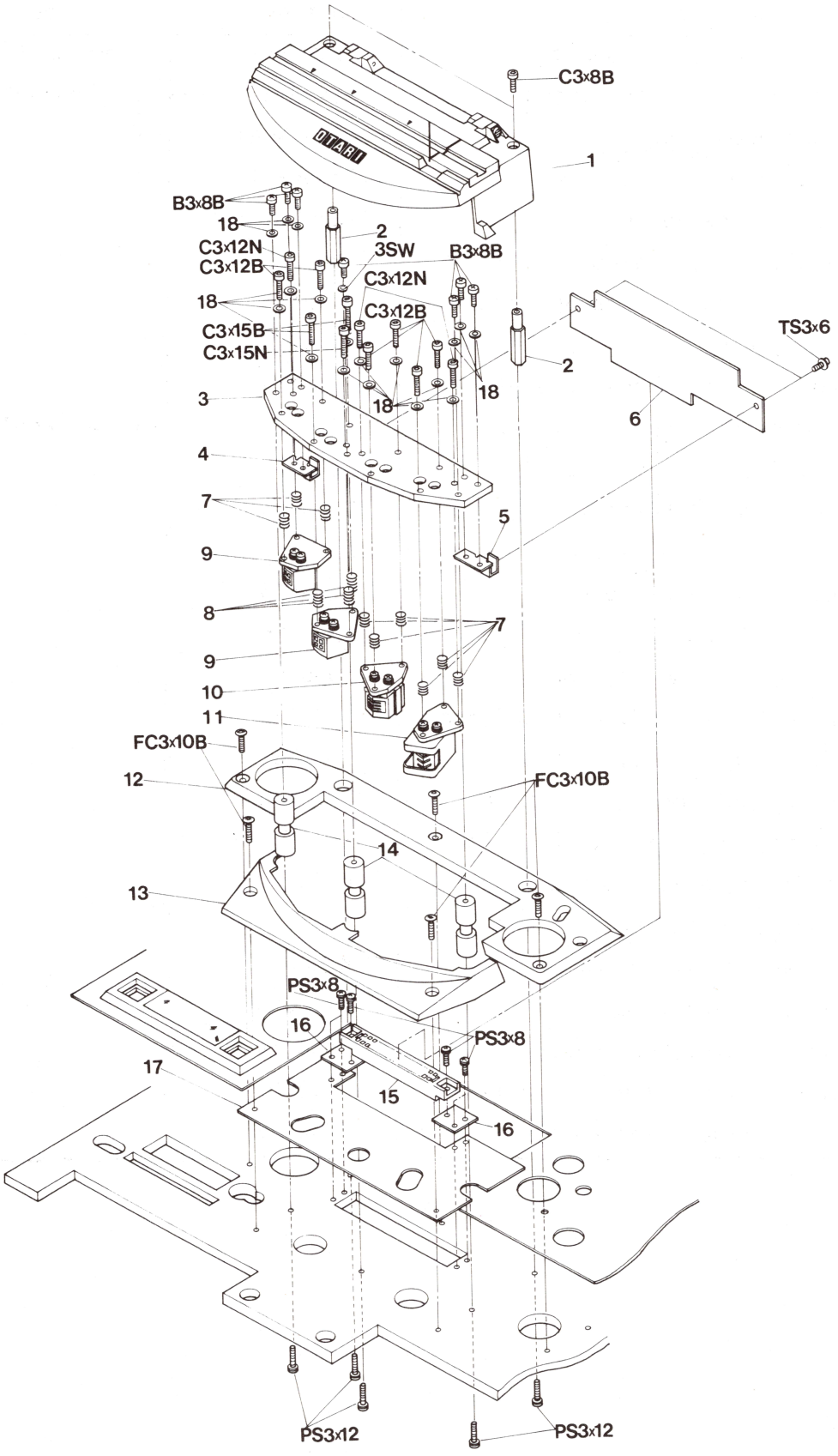

2. CHASSIS ASSEMBLY

Ref. No.	Description	Part No.	Notes
2-1	Panel, Trim, Transport	(T506408)	Ass'y
	Escutcheon, Pitch Control	(KC4H005A)	T5064-A
	Escutcheon, Cue	(KR4B006A)	
	Escutcheon Ass'y, Timer	(T5064-B)	
2-2	Shaft, Tape Guide	KG6E003	
2-3	Panel, Trim, Control	T506402	
2-4	Panel, Chassis, Transport	T506401	
2-5	Clamp, Wire	PZ1G053	
2-6	Channel, Reinforce, Chassis	T506405	
2-7	Spacer, P.C. Board, LED (B)	(KZ7A823)	Ass'y
2-8	P.C. Board Ass'y, LED (B)	PB-82T	
2-9	Transformer, Power	TF11059	
2-10	Bracket, C, Ventilate	K102911	
2-11	Angle, Chassis, Rear	T506413	
2-12	Frame, Chassis, Side	T506106	
2-13	Angle, P.C. Board, Control	T506403	
2-14	Angle Ass'y, P.C. Board, Control	T5064-C	
2-15	P.C. Board Ass'y, Control	PB-44S	
2-16	Angle, Reinforce, P.C. Board	T506406	
2-17	Collar, Angle Ass'y, P.C. Board	KZ7A322	
2-18	Stud, Angle Ass'y, P.C. Board	KZ7A182	
2-19	Washer, Trim, Panel	KZ6C051	
2-20	Washer, Vinyl, Panel	KZ6C011	
2-21	Washer, Panel, Control	KZ6C009	
2-22	Angle, Reinforce, Chassis	T506414	
2-23	Felt, Blind, Impedance Roller	PZ1B051	
2-24	Felt, Blind, Head Ass'y	PZ1B052	

EXPLODED VIEW 2. CHASSIS ASSEMBLY

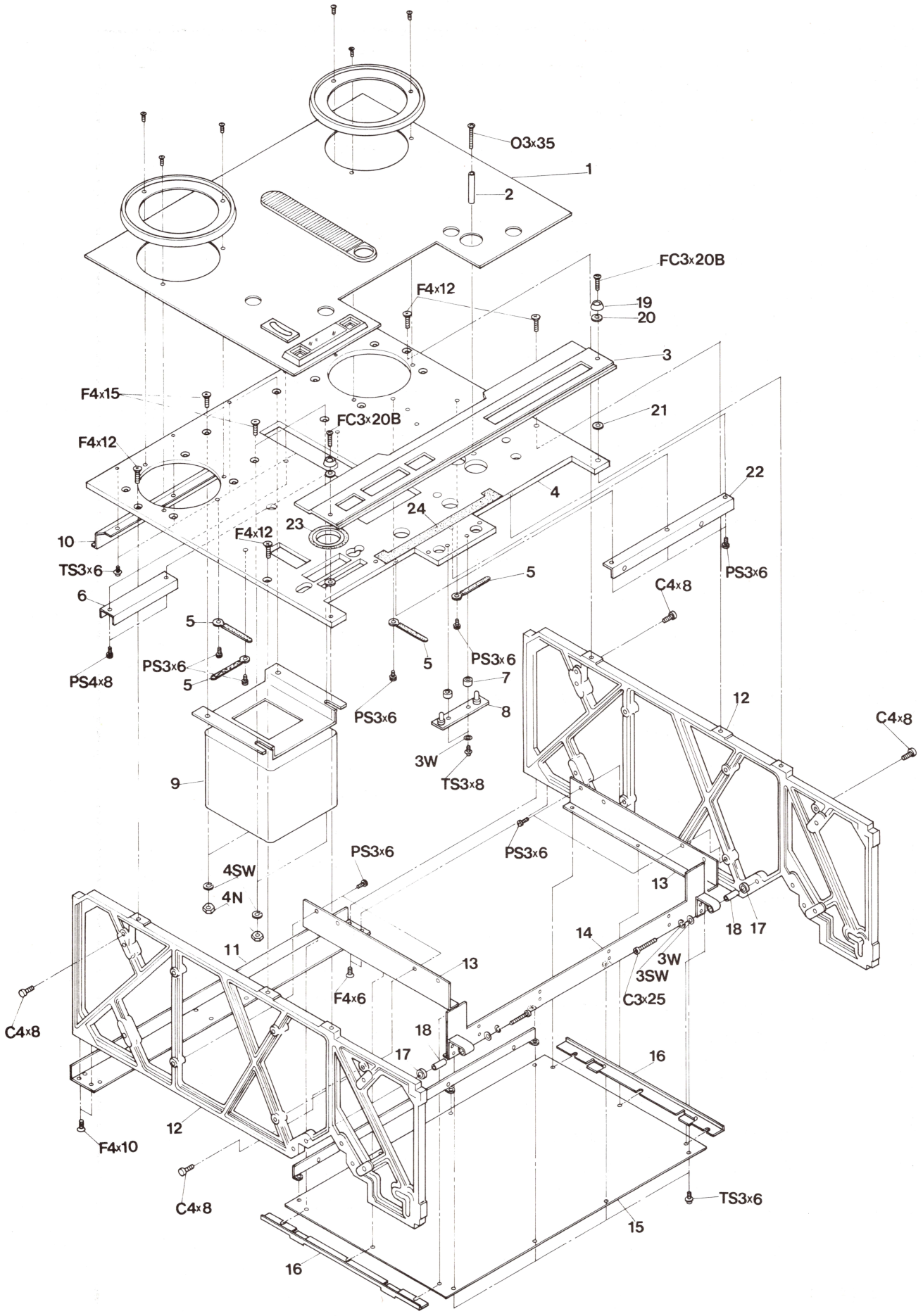

3. CAPSTAN, PINCH ROLLER and SHIFTER ASSEMBLY

Ref. No.	Description	Part No.	Notes
3-1	Cap, Capstan Motor	KC0B011A	
3-2	Stud, Capstan Motor	KZ7B220	
3-3	Plate, Capstan Motor	KC4H001	
3-4	Motor, Capstan	MR5A008	
3-5	Bracket, R, Capstan P.C. Board	KC4V002	
3-6	Bracket, L, Capstan P.C. Board	KC4V001	
3-7	Knob, Pitch Control	KN1024A	
3-8	P.C. Board Ass'y, LED (A)	PB-82S	
3-9	Felt, Blind, Potentiometer	PZ1B037	
3-10	Potentiometer, 500 ohm	RV252009	
3-11	Bracket, Potentiometer	KC4H002	
3-12	Cap, Pinch Roller	KP0C020	
3-13	Washer, Polyslider, $\phi 6 \times t0.25$	F523-6	
3-14	Pinch Roller	KP0A007	
3-15	Retaining Ring, E type, $\phi 4$	F74TE20	
3-16	Shaft, Pinch Roller	KP0B010	
3-17	Angle, Spring Hook	KZ3A023	
3-18	Retaining Ring, E type, $\phi 3$	F74TE15	
3-19	Retaining Ring, E type, $\phi 2$	F74TE09	
3-20	Shaft, Roller Arm	KP4L001	
3-21	Spring, Roller Arm	GS1011	
3-22	Arm Ass'y, Pinch Roller	KP-4N-A	
3-23	Solenoid, Pinch Roller	GP1B10	
3-24	Pin, Solenoid	KZ5A003	
3-25	Rod, Solenoid	KZ6A022	
3-26	Spacer, P.C. Board Ass'y, LED (A)	KZ7A823	
3-27	Cushion, Solenoid	PZ1C021	
3-28	Limit Stop, Solenoid	KZ2A016	
3-29	Washer, Spherical, Rod	KP0G004	
3-30	Spring, Pressure, Rod	GS2003	
3-31	Nuts, M4, Rod	F517-4	
3-32	Spring, Shifter Arm B	GS1028-A	
3-33	Shaft, Shifter Arm	KR4B001	
3-34	Arm, Shifter A	KR0B005	

EXPLODED VIEW 3. CAPSTAN, PINCH ROLLER and SHIFTER ASSEMBLY

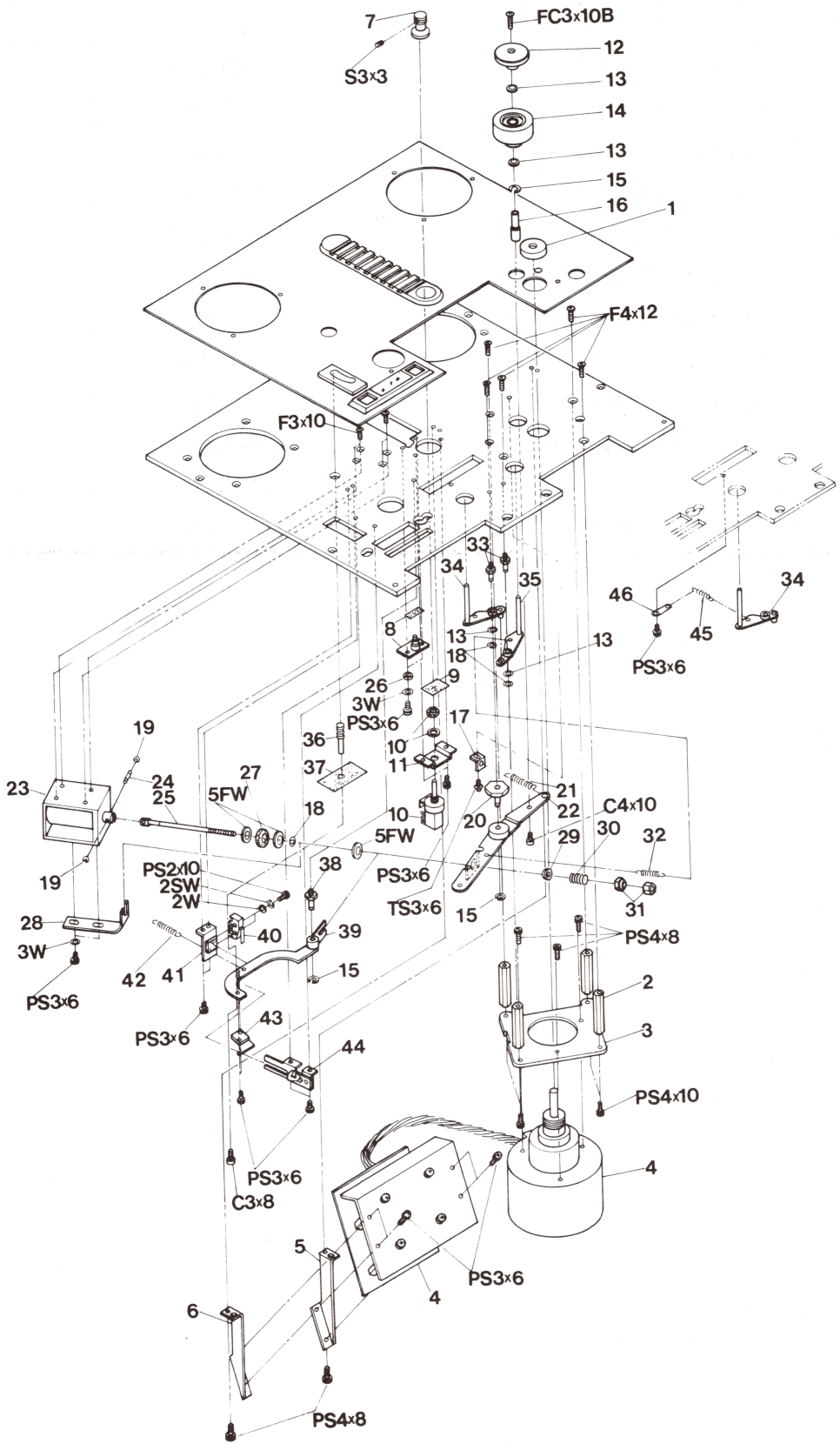

3. CAPSTAN, PINCH ROLLER, and SHIFTER ASSEMBLY

Ref. No.	Description	Part No.	Notes
3-35	Arm, Shifter B	KR0B006	
3-36	Knob, Cue Arm	KR4F002A	
3-37	Felt, Blind, Cue Arm	PZ1B001	
3-38	Shaft, Cue Arm	KR4B007	
3-39	Arm, Cue	KR4C001	
3-40	Switch, Micro	WH51029	
3-41	Bracket Ass'y, Switch, Cue	KR-4K-A	
3-42	Spring, Cue Arm	GS1033	
3-43	Hook, Cue Arm	KR4C003	
3-44	Latch Ass'y, Cue Arm	KR-4C-A	
3-45	Spring, Shifter Arm	GS1087	
3-46	Lug, Spring Hook	CN7D-003	

EXPLODED VIEW 3. CAPSTAN, PINCH ROLLER and SHIFTER ASSEMBLY

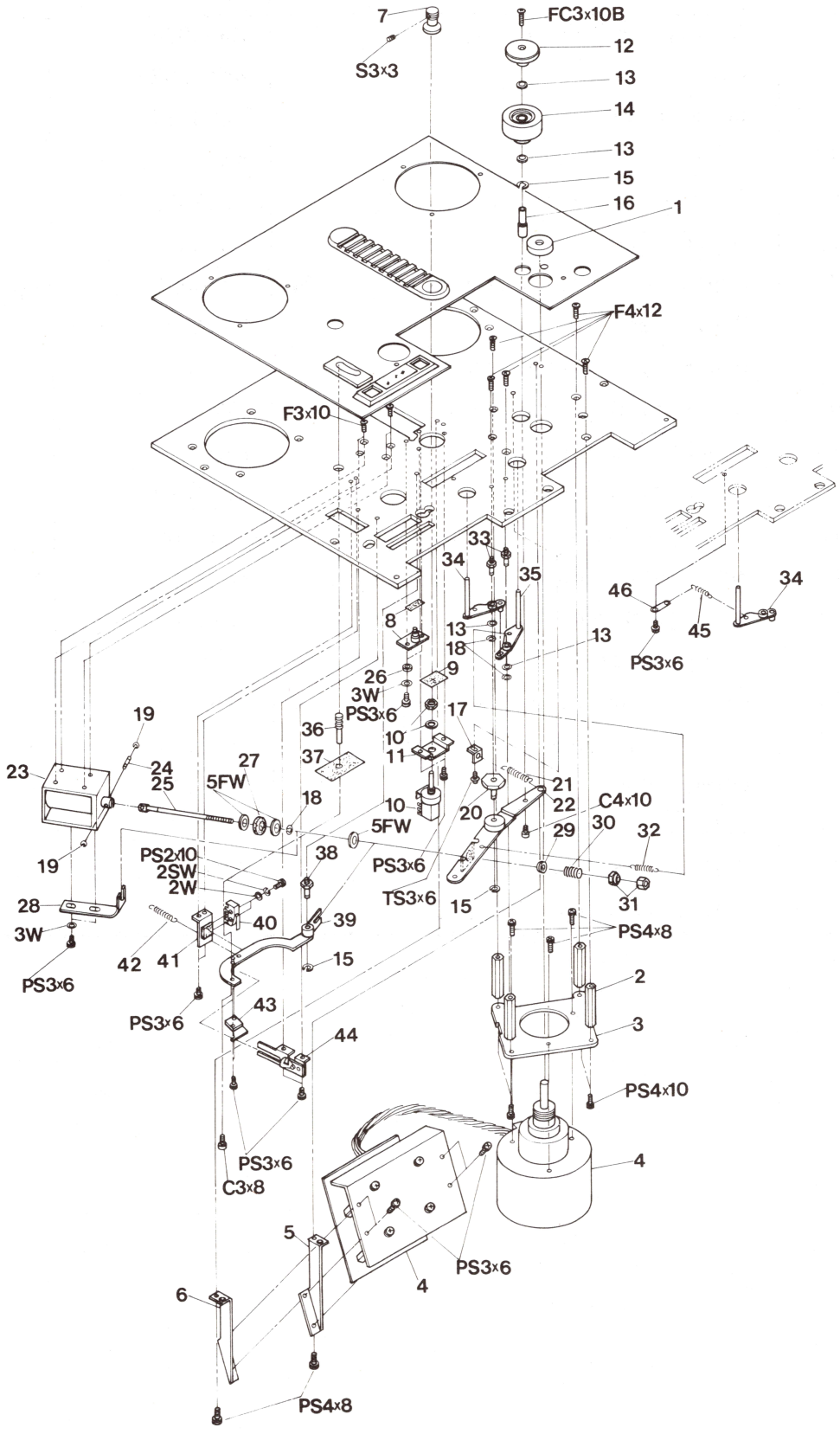

4. REEL ASSEMBLY

Ref. No.	Description	Part No.	Notes
4-1	Nails, Reel Drive	KW0E038	
4-2	Reel Table	KW4J002	
4-3	Drum, Reel	KW0B017	
4-4	Protector, Reel	KW0H007A	
4-5	Bracket, Reel Motor	KW0G016	
4-6	Motor, Reel	MR1C012	
4-7	Capacitor, Reel motor,6.5 μF,250WV	(CZ10023)	Ass'y
	P.C. Board, Capacitor	(PB9A179)	PB-73R
4-8	Bracket, L, Capacitor	KW4B003	
4-9	Bracket, R, Capacitor	KW4B004	
4-10	Bracket, L, Brake	KW0G013	
4-11	Bracket, R, Brake	KW0G012	
4-12	Retaining Ring, E Type, ϕ2	F74TE09	
4-13	Arm Ass'y, Brake	KW-4J-A	
4-14	Spring, Brake	GS1024	
4-15	Clamp, Brake	KZ3A047	
4-16	Pin, Solenoid, Brake	KZ5A003	
4-17	Retainer, Brake	KW4B001	
4-18	Drum, Brake	KW0A012	
4-19	Solenoid, Brake	GP1F02	
4-20	Cushion, Solenoid, Brake	PZ1B049	
4-21	Retaining Ring, E Type, ϕ3	F74TE15	

EXPLODED VIEW 4. REEL ASSEMBLY

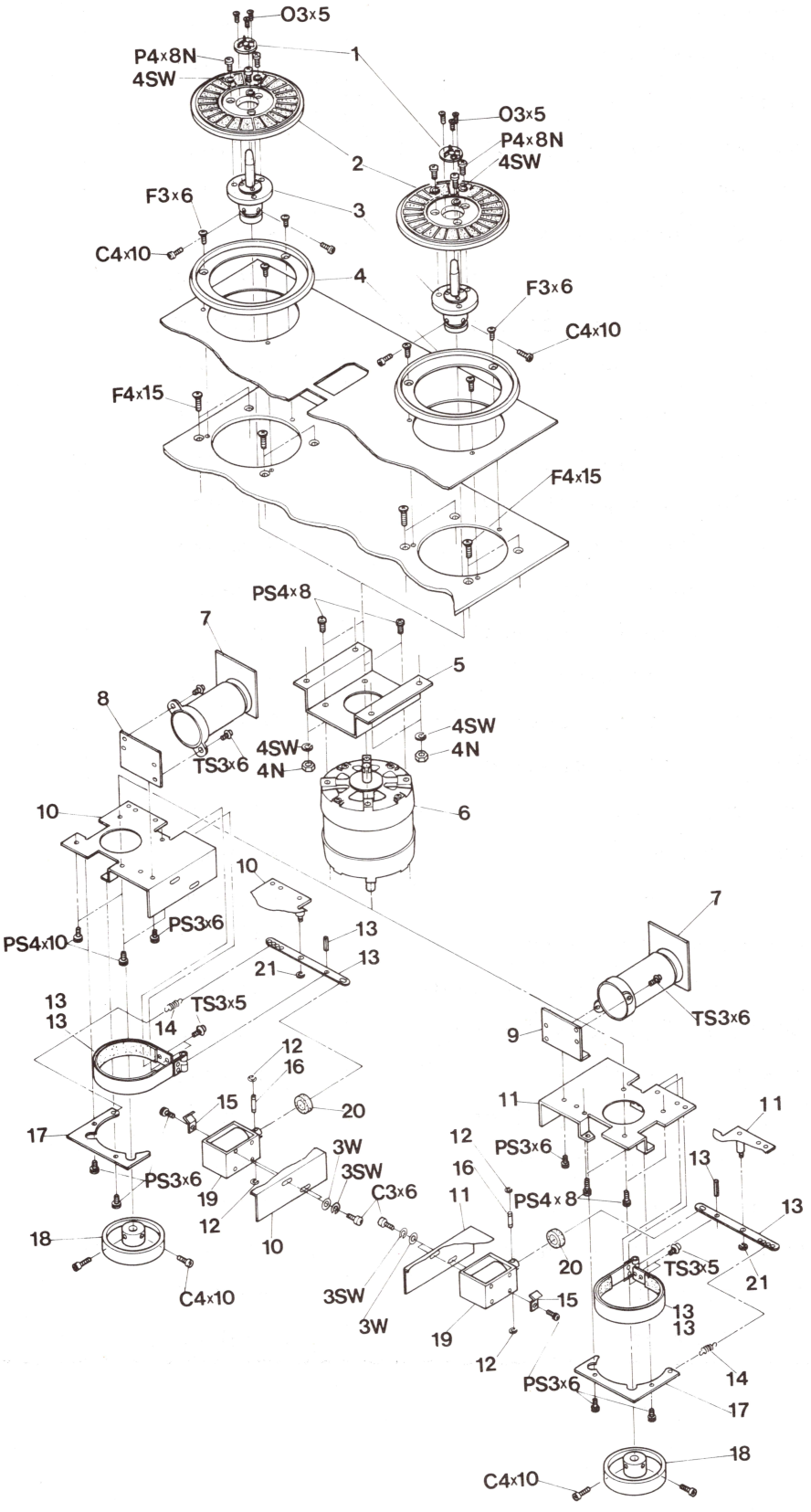

5. TENSION ARM, IMPEDANCE ROLLER, and TIMER ASSEMBLY

Ref. No.	Description	Part No.	Notes
5-1	Cap, Arm	KA0C005	
5-2	Arm, Tension	KA0A017A	
5-3	Shaft, Arm	KA4J001	
5-4	Washer, Polyslider, 05 × t0.5	F524-5	
5-5	Holder, Arm	KA0B008	
5-6	Guide, Tension Arm	KG4D007	
5-7	Nut, Holder	KZ6D004	
5-8	Drum, B, Spring Retaining	KA0E005	
5-9	Arm, Ass'y, Switch	KA-4K-B	
5-10	Switch, Micro	WH51027	
5-11	Bracket Ass'y, Magnet	KA-4K-A	
5-12	Spring, Takeup, Tension Arm	GS1048	
5-13	Angle, Spring Hook	KZ3A023	
5-14	Plate, Spring Hook	KZ3A024	
5-15	Drum, A, Spring Retaining	KA0E004	
5-16	Angle, Limit Stop	KA0H004	
5-17	Spring, Supply Tension Arm	GS1025	
5-18	Roller Ass'y, Impedance	KI-4G-A	
5-19	Washer, Holder	KI0H024	
5-20	Nut, Holder	KI0H025	
5-21	Holder, Plate	KI0H026	
5-22	Plate, Optical Shield	KI4G003	
5-23	P.C. Board Ass'y, Direction	PB-82M	
5-24	Bracket, P.C. Board Ass'y	KI4G002	
5-25	Sheet, Insulation	SR5K002	
5-26	P.C. Board Ass'y, Timer	PB-82L	
5-27	Button, Push, Memory	KN2067	
5-28	Felt, Blind, Button	PZ1B053	
5-29	Bracket, Switch, Memory	SR5K001	
5-30	Switch, Push, Memory	WH12097	
5-31	Lug, Terminal	CN7D-003	

EXPLODED VIEW 5. TENSION ARM, IMPEDANCE ROLLER, and TIMER ASSEMBLY

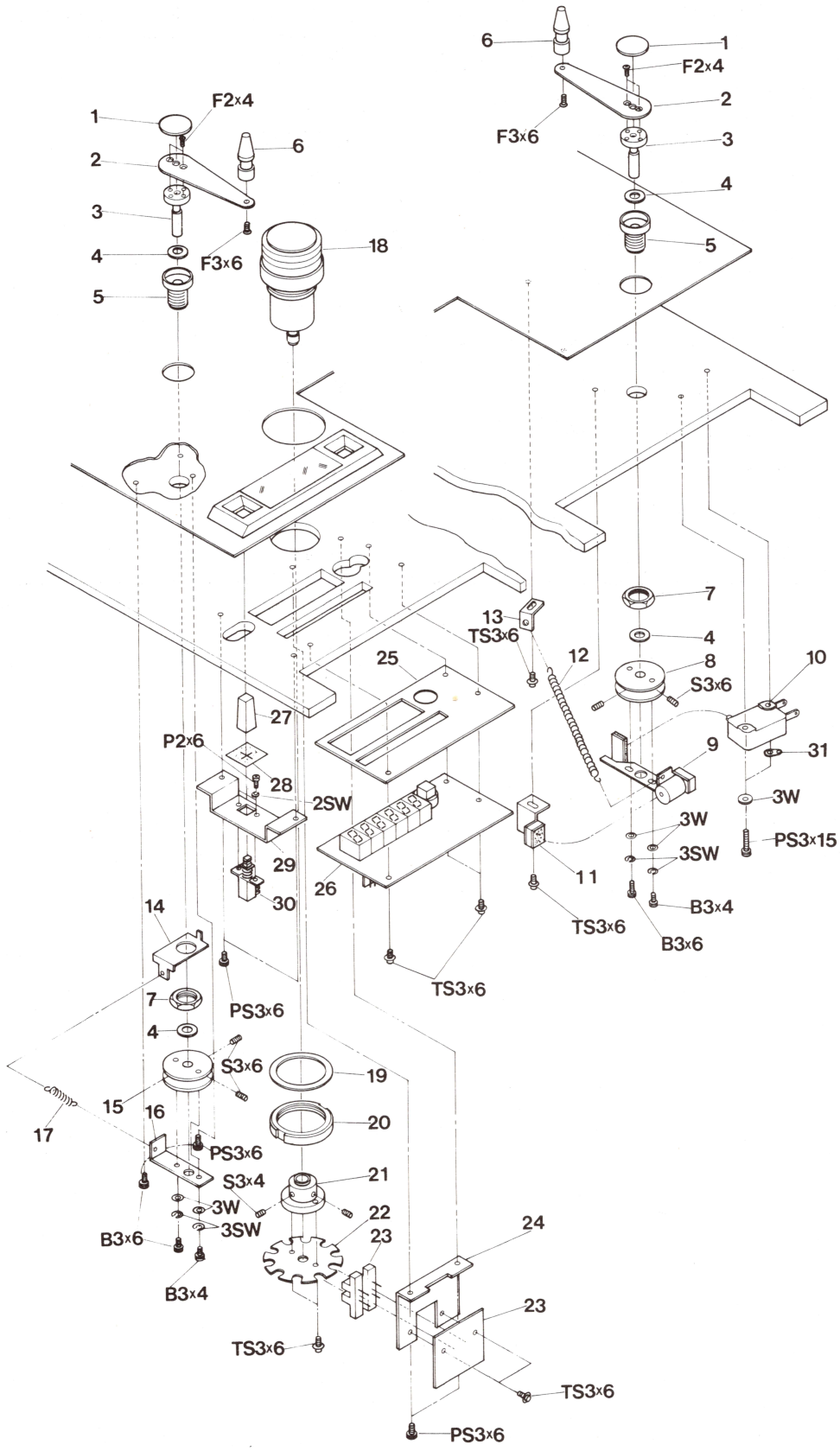

6. CONTROL SWITCH ASSEMBLY

Ref. No.	Description	Part No.	Notes
6-1	Button, Push, A PLAY REWIND F.FWD EDIT	KN2069	
6-2	Button, Push, B, REC	KN2070	
6-3	Button, Push, C, STOP	KN2071	
6-4	Protector, R, Button	CB20602	
6-5	Plate, R, Switch Base	CB20601	
6-6	Switch, Micro	WH11007	
6-7	Button, Push, POWER SPEED REEL	KN2072	
6-8	Protector, L, Button,	CB20701	
6-9	Plate, L, Switch Base	PB41E01	
6-10	P.C. Board, Ass'y, Power Switch	PB-76C	
6-11	Stud, Power Switch P.C. Board	KZ7B106	
6-12	P.C. Board Ass'y, Aux. Switch	PB-42F	

EXPLODED VIEW 6. CONTROL SWITCH ASSEMBLY

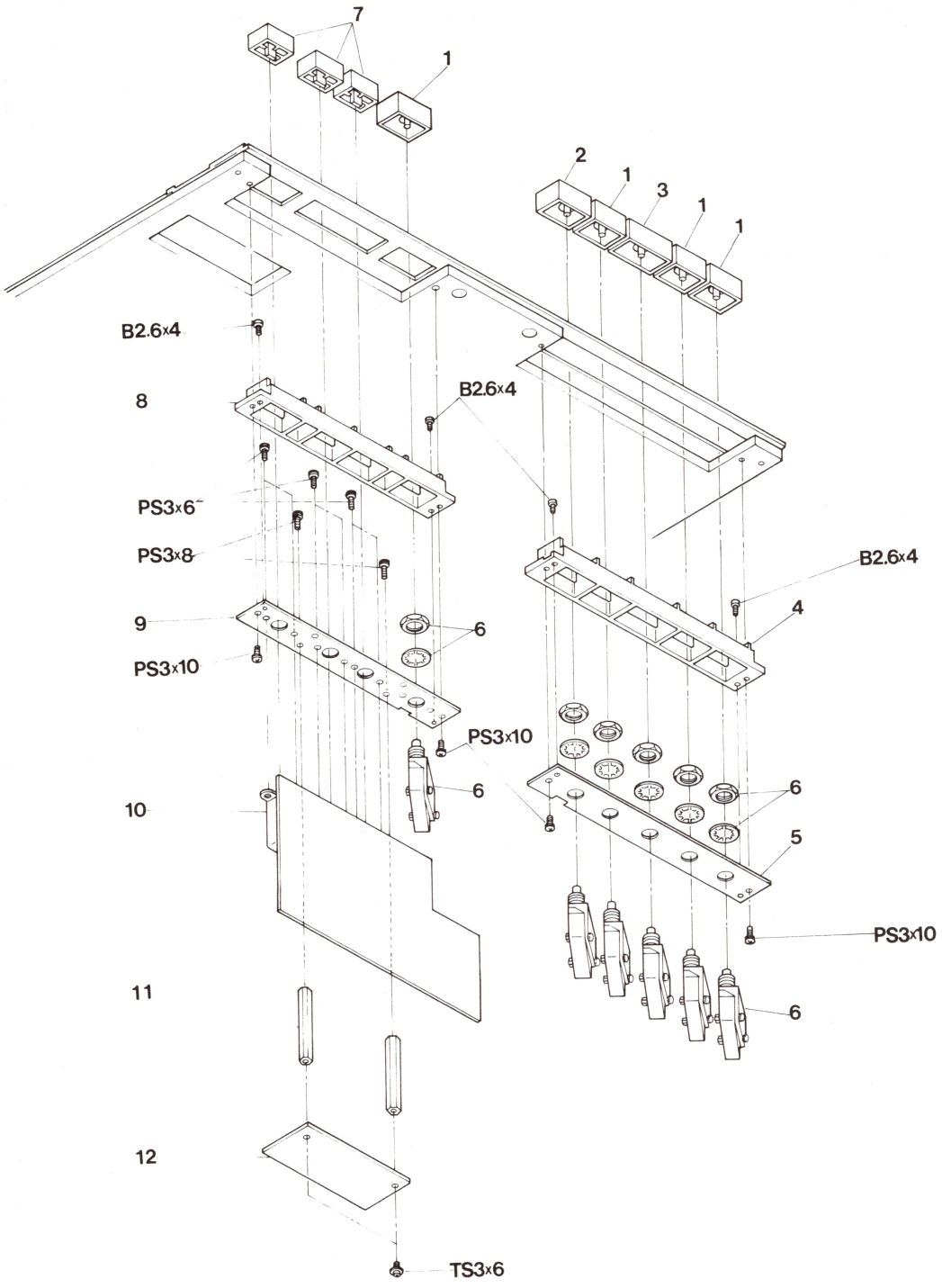

7. AMPLIFIER ASSEMBLY

Ref. No.	Description	Part No.	Notes
7-1	Knob, LINE	KN1045B	
7-2	Knob, TEST OSC	KN1045F	
7-3	Knob, PHONE LEVEL	KN1045D	
7-4	Knob, MIC	KN1045C	
7-5	Button, READY/SAFE	KN1060	
7-6	Button, MONITOR SELECT	WH0B016B	
7-7	Button, PHONE	KN1061	
7-8	Washer, Knob, Amp.	KZ6C052	
7-9	Panel, Trim, Amp.	A104501	
7-10	Meter, VU	ME11010	
	Lamp, VU meter	(ME11010A)	
7-11	Cushion, Meter	A104513	
7-12	Panel, Chassis, Amp.	A104502	
7-13	P.C. Board Ass'y, MIC ATT.	PB-82R	
7-14	Jack, MIC EXT-OSC	CN601142	
7-15	Jack, PHONES	CN602144	
7-16	Potentiometer, Amp., 10 kohm	RV214082	
7-17	Switch, Rotary, TEST OSC	WH63039	
7-18	Felt, Blind, Button	PZ1B053	
7-19	Switch, Push, READY/SAFE	WH12099	
7-20	Switch, Push, MONITOR SELECT	WH12098	
7-21	Felt, Blind, Slide Switch	PZ1B046	
7-22	P.C. Board Ass'y, LED MONITOR SELECT	PB-82Q	

EXPLODED VIEW 7. AMPLIFIER ASSEMBLY

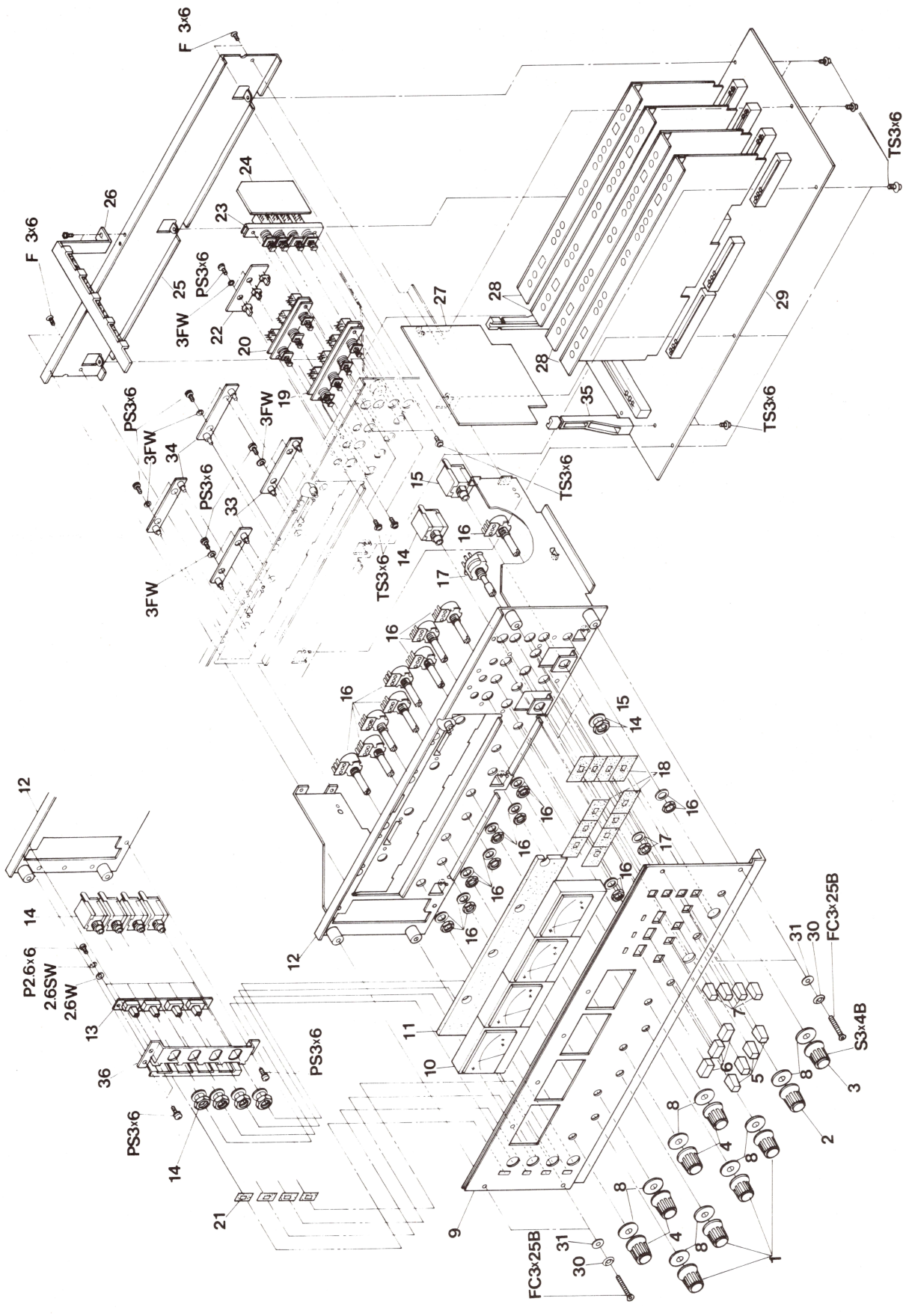

7. AMPLIFIER ASSEMBLY

Ref. No.	Description	Part No.	Notes
7-23	Switch, Push, PHONES	WH12100	
7-24	P.C. Board Ass'y, Phone Amp.	PB-15A	
7-25	Panel, Rear, Amp.	A104510	
7-26	Limit Stop Ass'y, P.C. Board	A1045-AA	
7-27	P.C. Board Ass'y, Amp. Control	PB-45E	
7-28	P.C. Board Ass'y, REC/REP. Amp.	PB-14Z →	NAB
		PB-15I →	IEC
7-29	P.C. Board Ass'y, Mother	PB-76D	
7-30	Washer, Trim, Panel	KZ6C051	
7-31	Washer, Vinyl, Panel	KZ6C011	
7-33	P.C. Board Ass'y, LED, PEAK	PB-82P	
7-34	P.C. Board Ass'y, LED, READY	PB-82N	
7-35	Guide, P.C. Board	CN7B-023	
7-36	Bracket, Jack	A104509A	

EXPLODED VIEW 7. AMPLIFIER ASSEMBLY

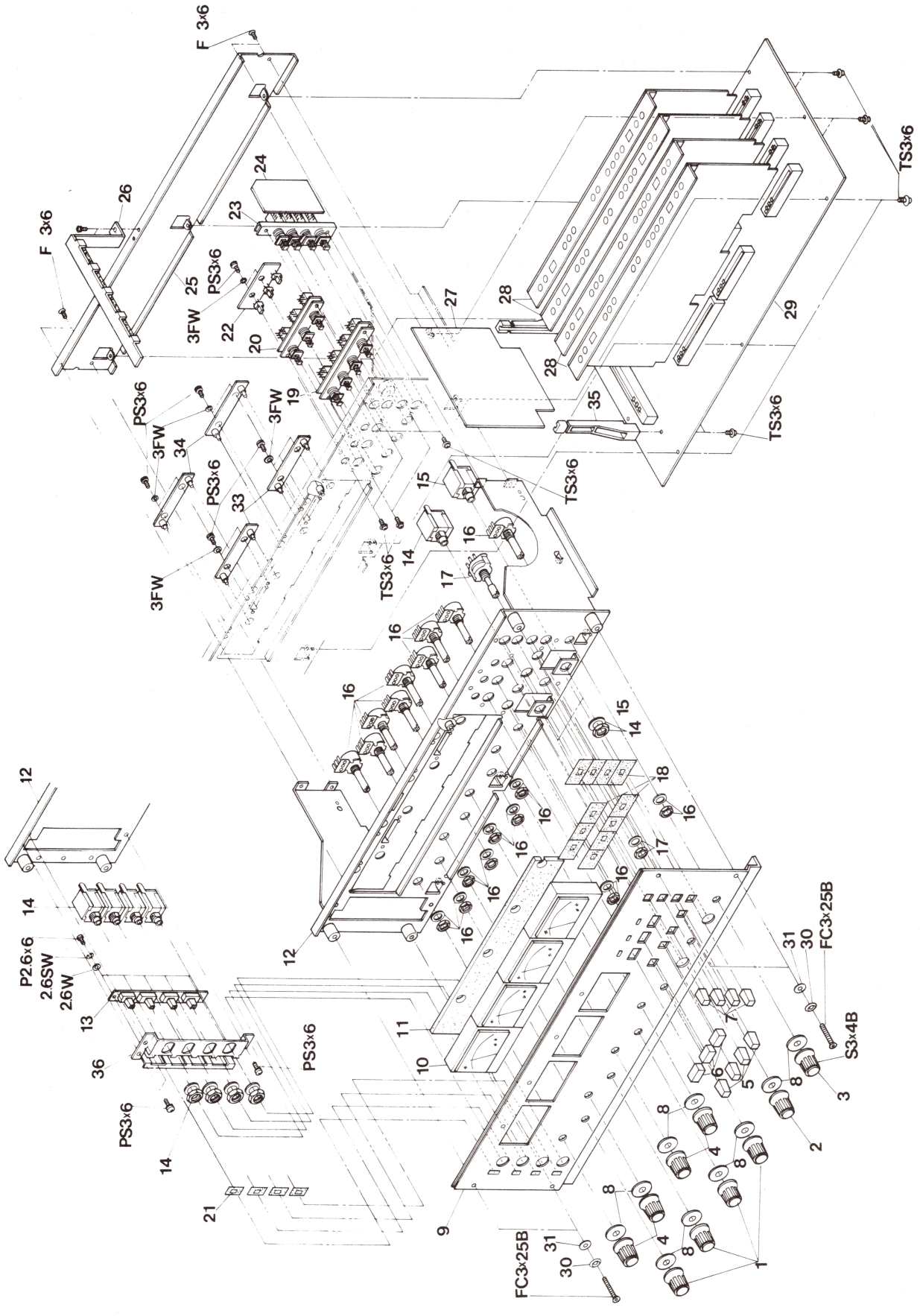

8. CONNECTOR PANEL ASSEMBLY

Ref. No.	Description	Part No.	Notes
8-1	Panel, Connector	A104512	
8-2	Receptacle, A.C. Inlet, Power	CN603012	
8-3	Terminal, Ground	CN901040	
8-4	Connector, 3 Socket, XLR Type	CN103046	
8-5	Connector, 3 Pin, XLR Type	CN103045	
8-6	Connector Ass'y, REMOTE	CN7C-006	

EXPLODED VIEW 8. CONNECTOR PANEL ASSEMBLY

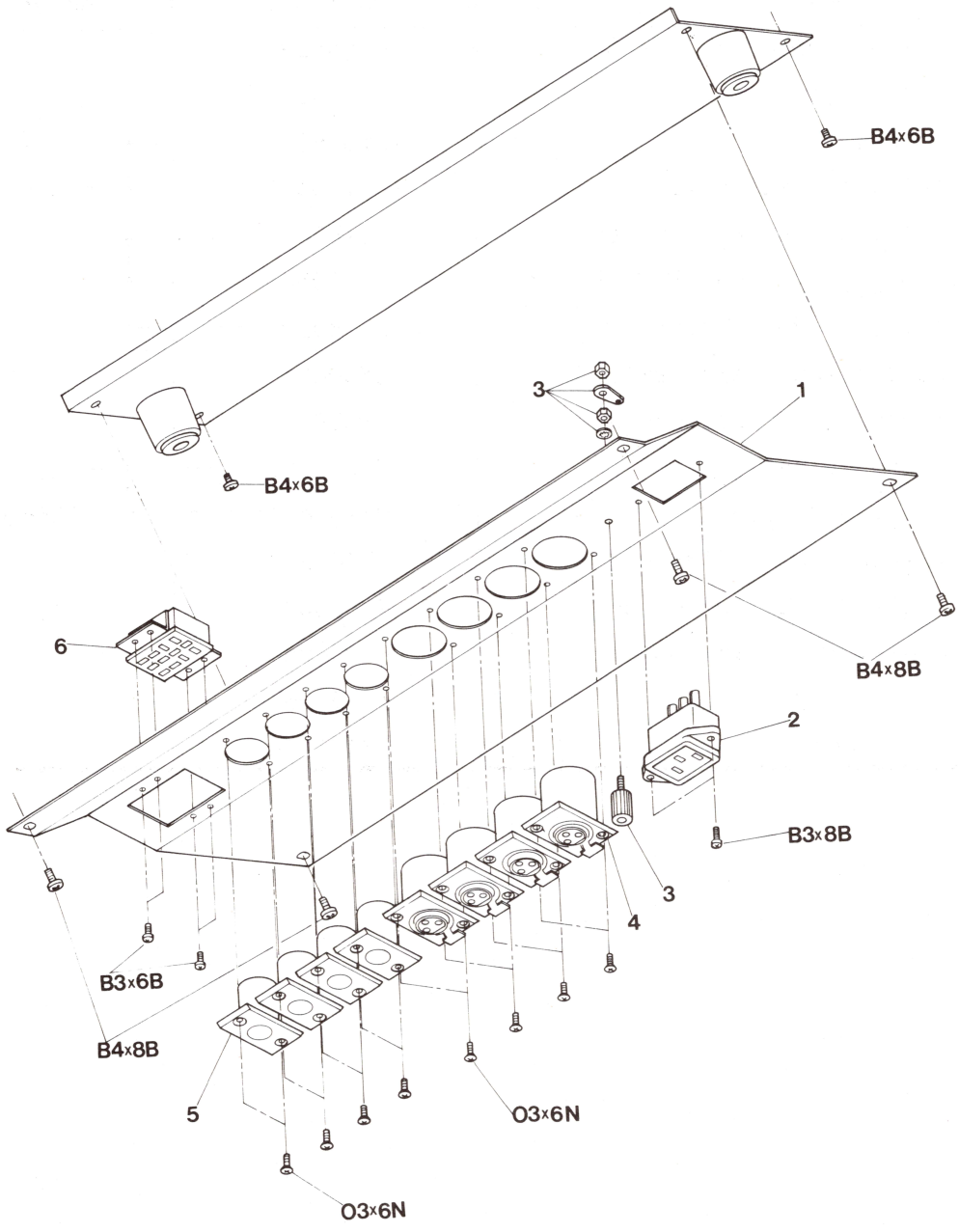

9. CASE ASSEMBLY

Ref. No.	Description	Part No.	Notes
9-1	Stand, Support, Tape Deck	K105609	
9-2	Foot, Stand	CY4049	
9-3	Cover, Rear	(K105604)	Ass'y K105603
9-4	Felt, B, Rear Cover	(PZ1B030)	
9-5	Felt, Blind, Rear Cover	(PZ1B047)	
9-6	Sponge, Cushion, P.C. Board	(PZ1C050)	
9-7	Felt, A, Rear Cover	(PZ1B029)	
9-8	Escutcheon, Ventilation	CY5001A	
9-9	Bracket, C, Escutcheon	K102911	
9-10	Board, Side	(K105602)	Ass'y K105601
9-11	Grip, Side Board	(CY1004)	
9-12	Washer, Trim, Side Board	KZ6C028	
9-13	Angle, L, Bottom Cover	K105607	
9-14	Angle, R, Bottom Cover	K105608	
9-15	Cover, Bottom	K105606	
9-16	Foot, Bottom	CY4011-A	

EXPLODED VIEW 9. CASE ASSEMBLY

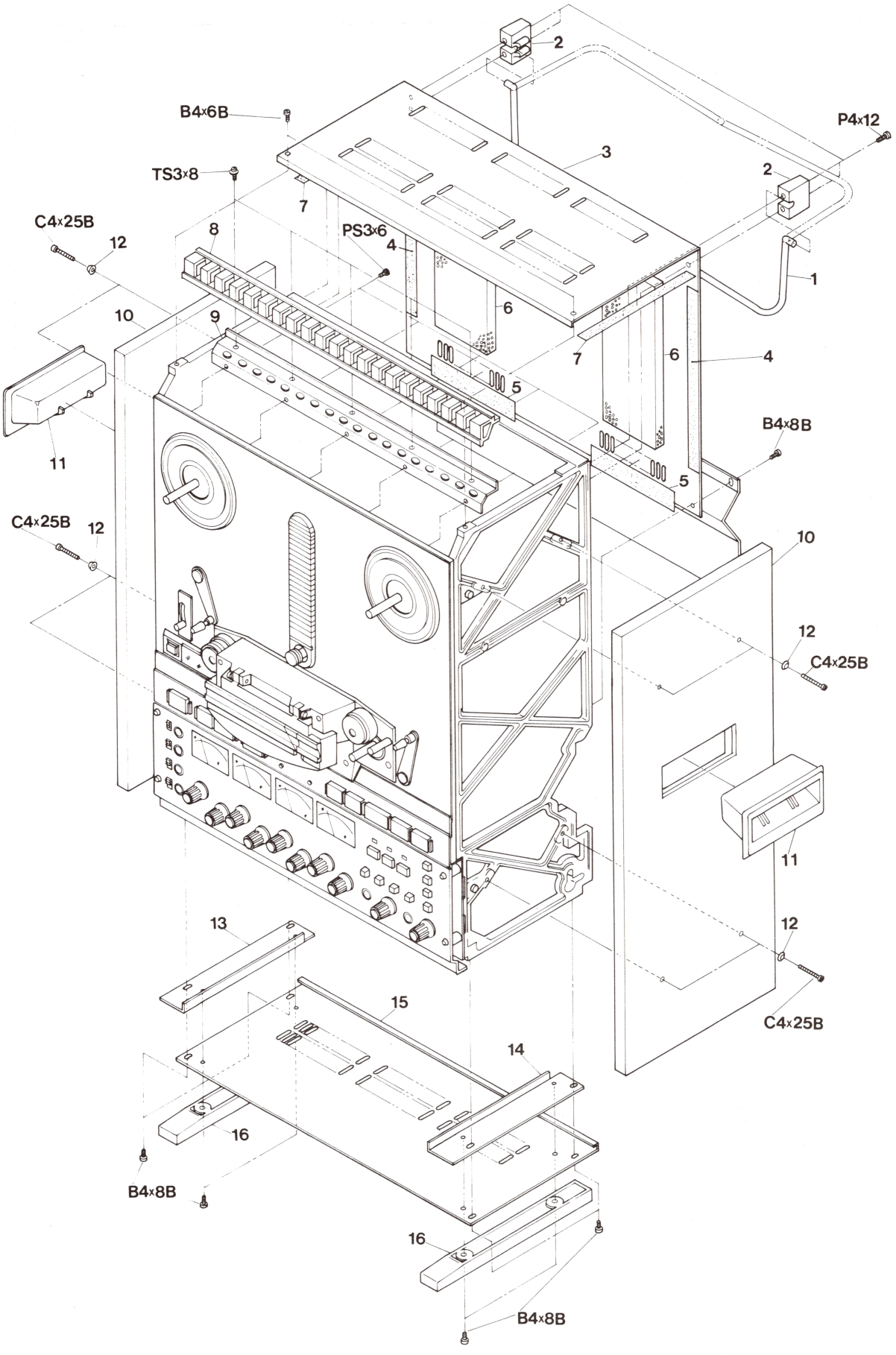

10. LOCATION OF RESPECTIVE ASSEMBLY

Ref. No.	Description	Part No.	Notes
10-1	Reel Ass'y	KW-4J	
10-2	Head Ass'y	KH-4Y	
10-3	Pinch Roller Ass'y	KP-4N	
10-4	Capstan Ass'y	KC-4V	
10-5	Tension Arm Ass'y B	KA-4S	
10-6	Control Switch Ass'y A	CB-234	
10-7	Side Board Ass'y	K105601	
10-8	Tension Arm Ass'y A	KA-4R	
10-9	Impedance Roller Ass'y	KI-4G	
10-10	Tape Timer Ass'y	SR-5K	
10-11	Control Switch Ass'y B	CB-235	
10-12	Record & Reproduce Amplifier Ass'y	A1045	
10-13	Foot, Rear	CY4013	
10-14	Bottom Cover Ass'y	K105605	

EXPLODED VIEW 10. LOCATION OF RESPECTIVE ASSEMBLY

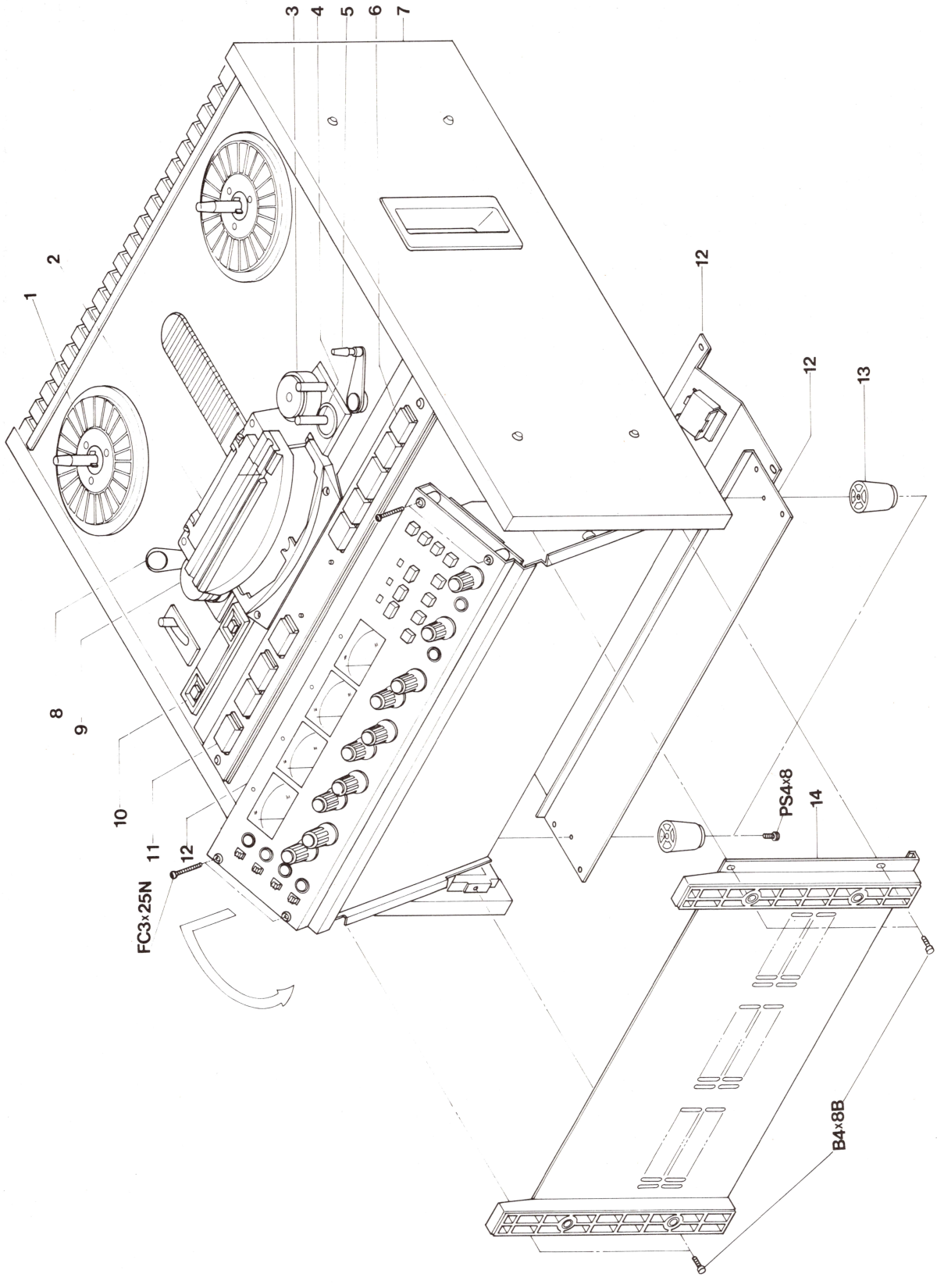

PARTS LIST 11. PACKAGING

Ref. No.	Description	Part No.	Notes
11-1	Plate, TOP	K703126	
11-2	Packing, L. Side	K703103	
11-3	Packing, R. Side	K703102	
11-4	Plate, Manual Hold	K703124	
11-5	Accessory, Hold Down Knob	KW0HA	
11-6	Accessory, Operation and Maintenance Manual	OS3-031	
11-7	Accessory, Reel, NAB 10 1/2"	ZA-51A	
11-8	Plate, Spacing, Reel Box	K703123	
11-9	Cover, Tape Recorder	PZ9C003	
11-10	Packing, Bottom	K703104	
11-11	Case, Packing	K703101	

EXPLODED VIEW 11. PACKAGING

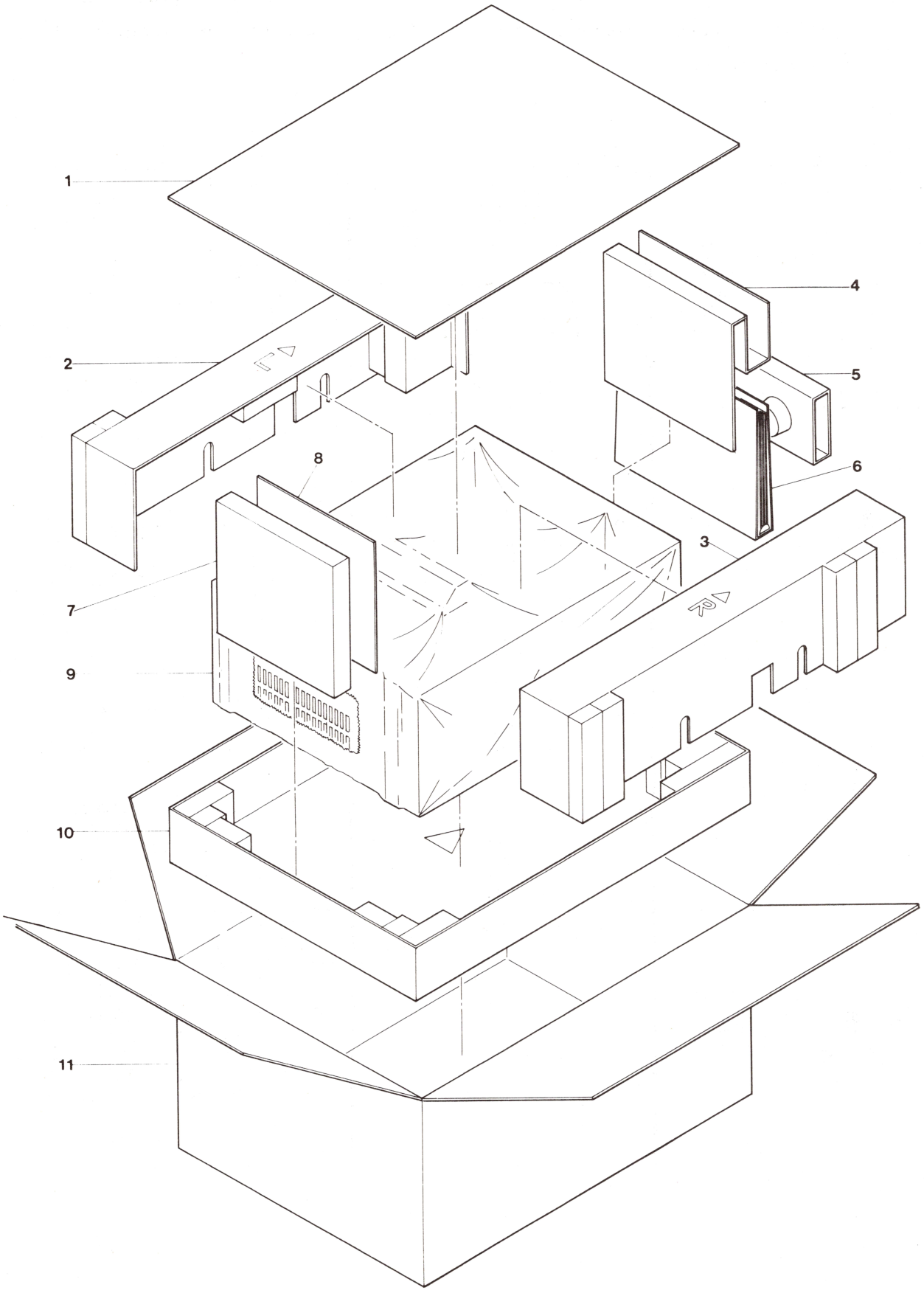

10-4 PIN IDENTIFICATION

The following table shows the pin identification of all diodes, LEDs transistors, and integrated circuits (ICs), used in the circuits of this equipment.

DIODES

D-1

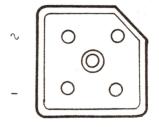

PNS2VB20
(S2VB20)
PNS4VB10
(S4VB10)
PNS5VB20
(S5VB20)

BOTTOM VIEW

D-2

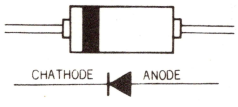

PN1S1588
(1S1588)
PN1N4448
(1N4448
or
FDH9615)

D-3

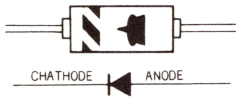

PNSM1-02
(SM-1A-02)

D-4

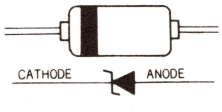

PNRD22EB
(RD22EB)
PNR6.2EB
(RD6.2EB)

LED

D-5

PNTLR124 (TLR 124)
PNTLY124 (TLY 124)
PNTLG124 (TLG 124A)
PNTLO124 (TLO 124)

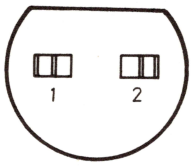

1. ANODE
2. CATHODE

BOTTOM VIEW

D-6

PNTLG208
(TLG208)

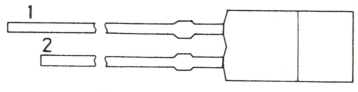

1. ANODE
2. CATHODE

D-7

PNTLR 206
(TLR206)
PNTLG206
(TLG206)

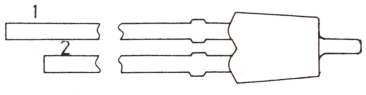

1. ANODE
2. CATHODE

D-8 PHOTO INTERRUPTER

PNON1102
(ON1102)

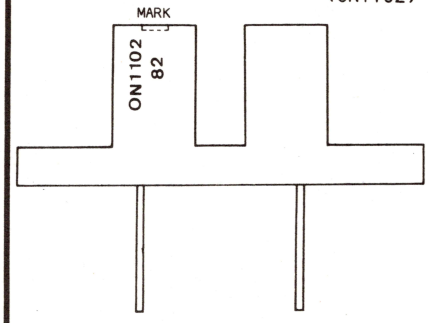

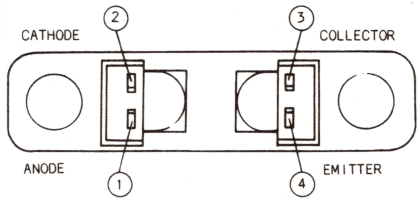

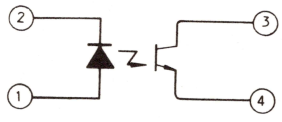

D-9

LED DISPLAY PNFND367
(FND367)

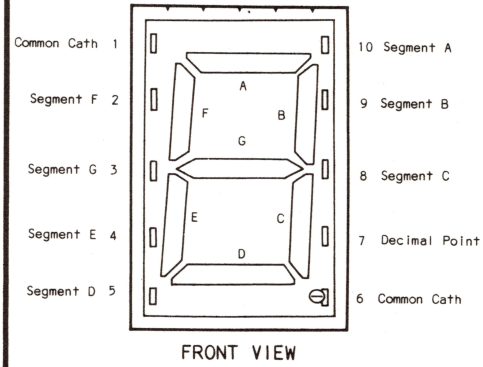

FRONT VIEW

TRANSISTOR

Tr-1

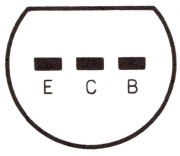

BOTTOM VIEW

QA720R
(2SA720R)
QA1015GR
(2SA1015GR)
QA1020Y
(2SA1020Y)
QC1685R
(2SC1685R)
QC1815BL
(2SC1815BL)

Tr-2

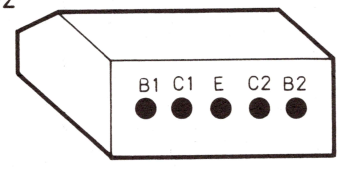

BOTTOM VIEW

QA798G
(2SA798G)

Tr-3

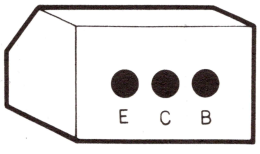

BOTTOM VIEW

QB564L
(2SB564L)

Tr-4

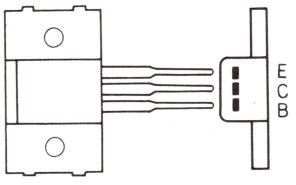

QB616R
(2SB616R)

Tr-5

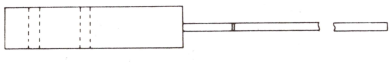

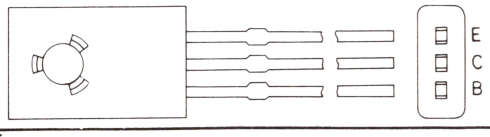

QC2324K
(2SC2324K)

Tr-6

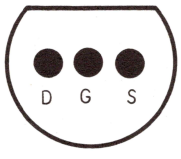

BOTTOM VIEW

Q2SK105J
(2SK105J)
Q2SJ74BL
(2SJ74BL)

Tr-7

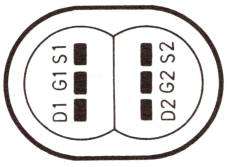

BOTTOM VIEW

Q2K146BL
(2SK146BL)

IC

IC-1 TRANSISTOR ARRAY

ITD 62301
(TD 62301)

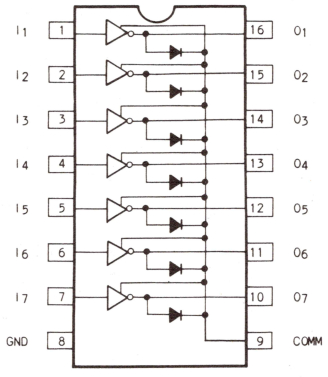

TOP VIEW

IC-2 TRANSISTOR ARRAY

IM54533P
(M54533P)

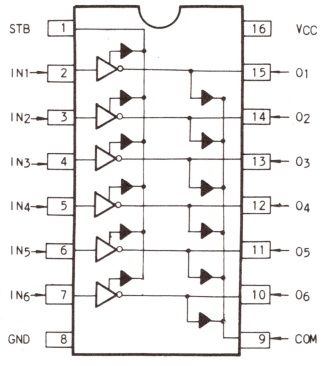

TOP VIEW

IC-6

IHA12017
(HA12017)

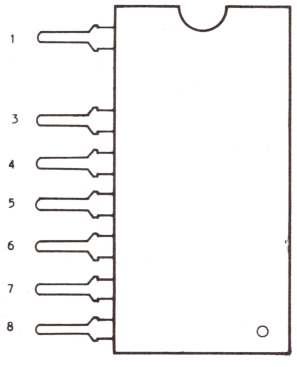

PIN FUNCTION

1 OUT	6 IN +
3 BIAS	7 IN −
4 −VCC	8 +VCC
5 COMP.	

IC-3 VOLTAGE REGULATOR

IHC14305(μPC14305)
IHC14315(μPC14315)
or
IE15UC(μA7815UC)
IHC14324(μPC14324)

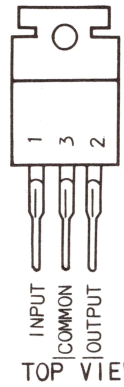

TOP VIEW

IC-4 VOLTAGE REGULATOR

IMC7915C
(MC7915CT)
or
IE7915UC
(μA7915UC)

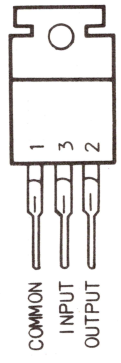

TOP VIEW

IC-5 I-0001

(NJM4559DE)
I-0009
(NJM4556DE)

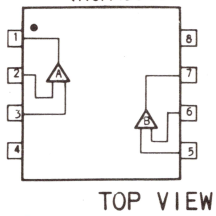

PIN FUNCTION

1	A OUTPUT
2	A−INPUT
3	A+INPUT
4	V−
5	B+INPUT
6	B−INPUT
7	B OUTPUT
8	V+

TOP VIEW

IC-7 IRC555DB

(RC555DB)

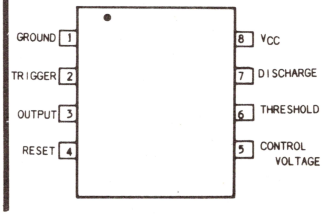

TOP VIEW

IC-8

DECK CONTROL I-0012

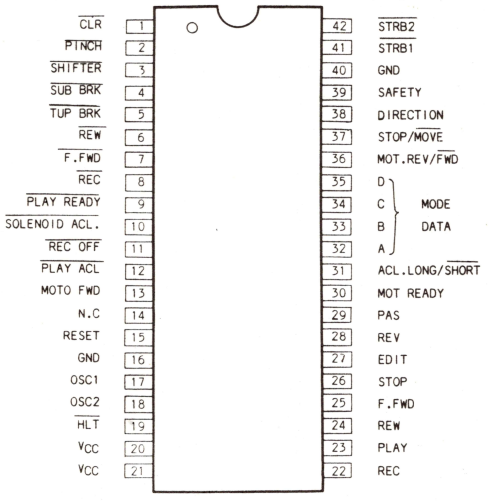

TOP VIEW

IC-9

DIRECTION I-0012

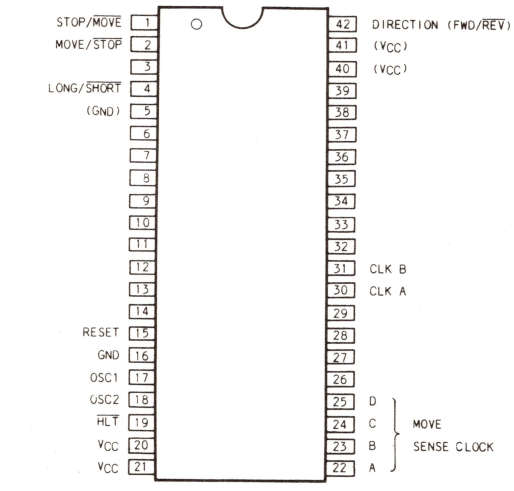

TOP VIEW

IC-10

TIMER I-0012

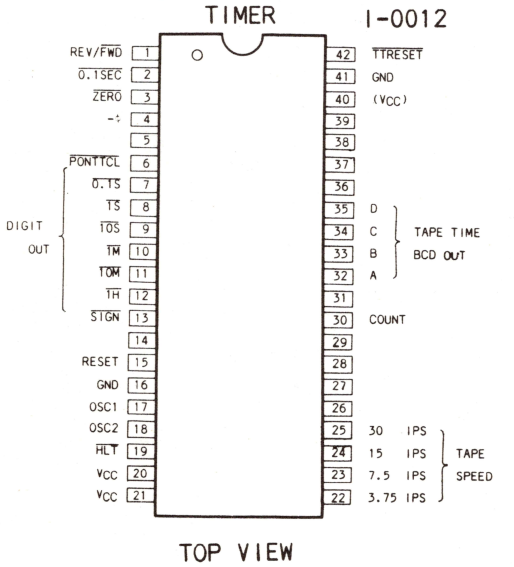

TOP VIEW

IC-11 IMC 14001 (MC 14001B)

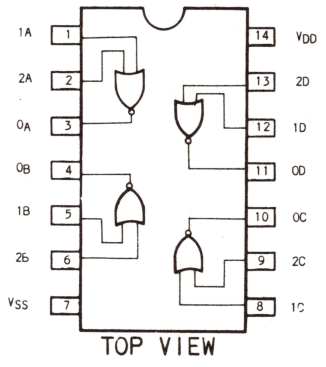

TOP VIEW

IC-12 IMC 14011 (MC 14011B)

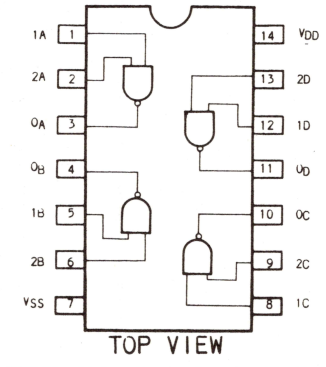

TOP VIEW

IC-13 IMC 14013 (MC 14013B)

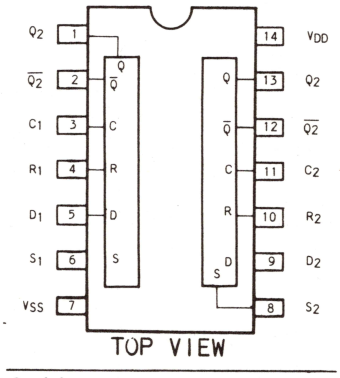

TOP VIEW

IC-14 IMC 14015 (MC 14015BCP)

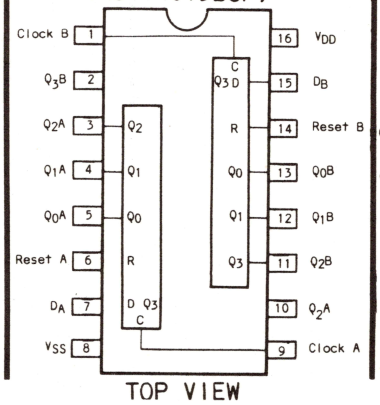

TOP VIEW

IC-15 IMC 14049 (MC 14049B)

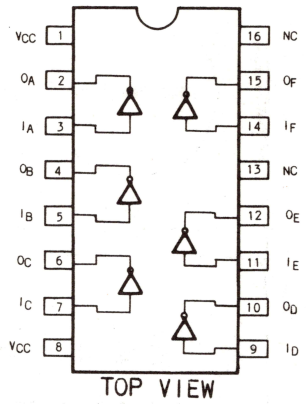

TOP VIEW

IC-16 IMC 14050 (MC 14050B)

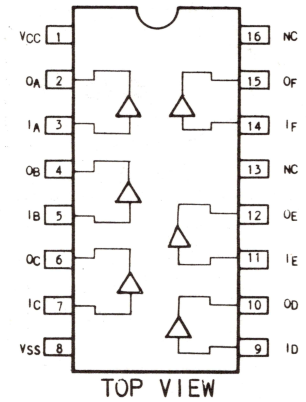

TOP VIEW

IC-17 IMC 14069 (MC 14069B)

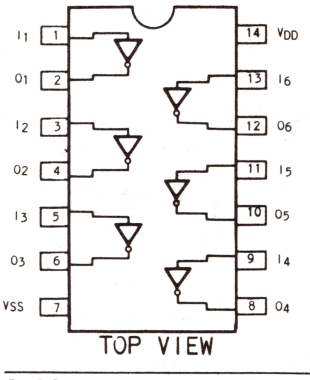

TOP VIEW

IC-18 IMC 14071 (MC 14071B)

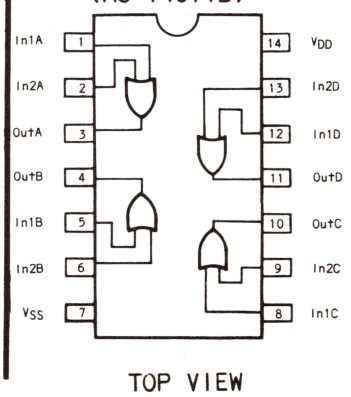

TOP VIEW

IC-19 IMC 14073
(MC 14073B)

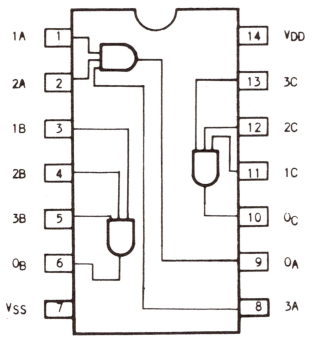

TOP VIEW

IC-20
IMC 14081
(MC 14081B)

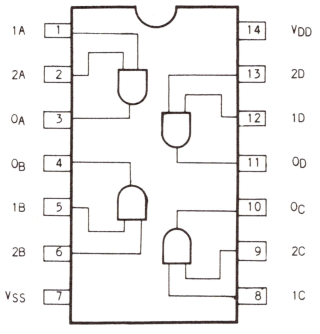

TOP VIEW

IC-21
IMC 14538
(MC 14538B)

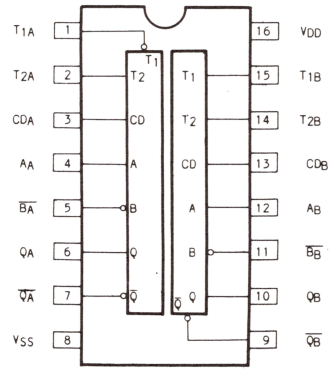

TOP VIEW

IC-22 IMC 14584
(MC 14584B)

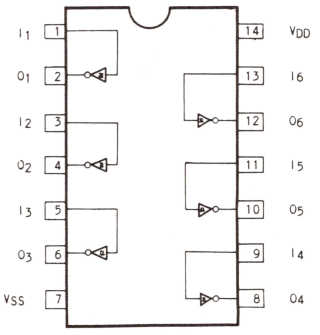

TOP VIEW

IC-23
IMSM 561
(MSM 561RS)

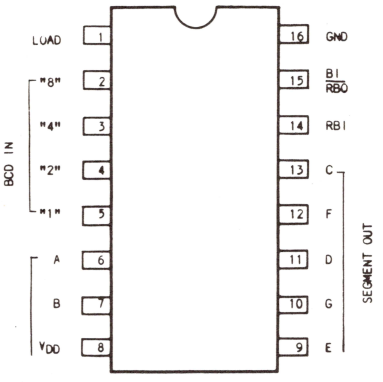

TOP VIEW

IC-24
1ALS05N
(SN74LS05N)
1A06N
(SN7406N)

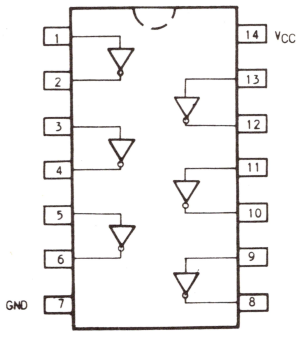

TOP VIEW

IC-25 1A07N
(SN7407N)

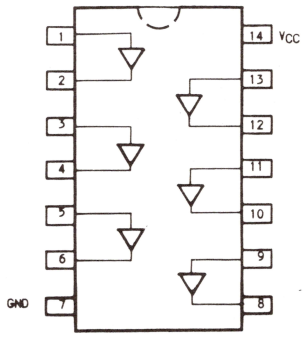

TOP VIEW

IC-26
1ALS190N
(SN74LS190N)

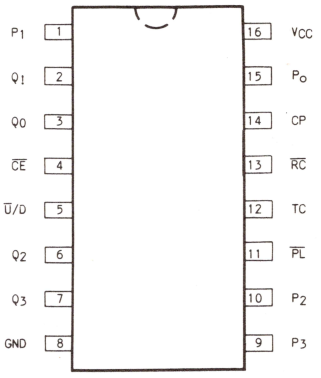

TOP VIEW

IC-27
1ALS259N
(SN74LS259N)

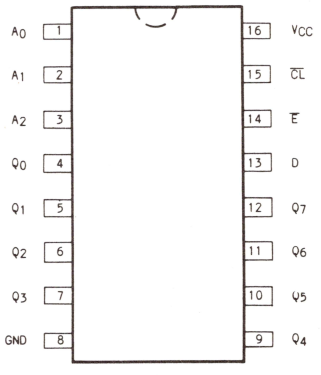

TOP VIEW

MX5050 BQ2 TAPE RECORDER

SCHEMATIC DIAGRAMS

TYPE I

OTARI PART No.	ASSEMBLY NAME	DWG. No.
PB76E0A	HEAD Connection PCB Ass'y	4-28961
CB3170A	Tape Transport Wiring Diagram	3-7695
PB82L0A	Timer PCB Ass'y	4-28963
PB44S08A	Control PCB Ass'y	3-8376
PB82R0A	MIC ATT PCB Ass'y	4-28965
PB14Z0A	REC REP AMP PCB Ass'y	3-8497
PB45E0A	AMP Control PCB Ass'y	3-6649
PB76D0A	Mother PCB Ass'y	3-6287
PB15A0A	HEAD PHONE PCB Ass'y	3-6399

部番	図番	品番	品名，定格	個数	備考

適用 MX5050BQII MKIII-4

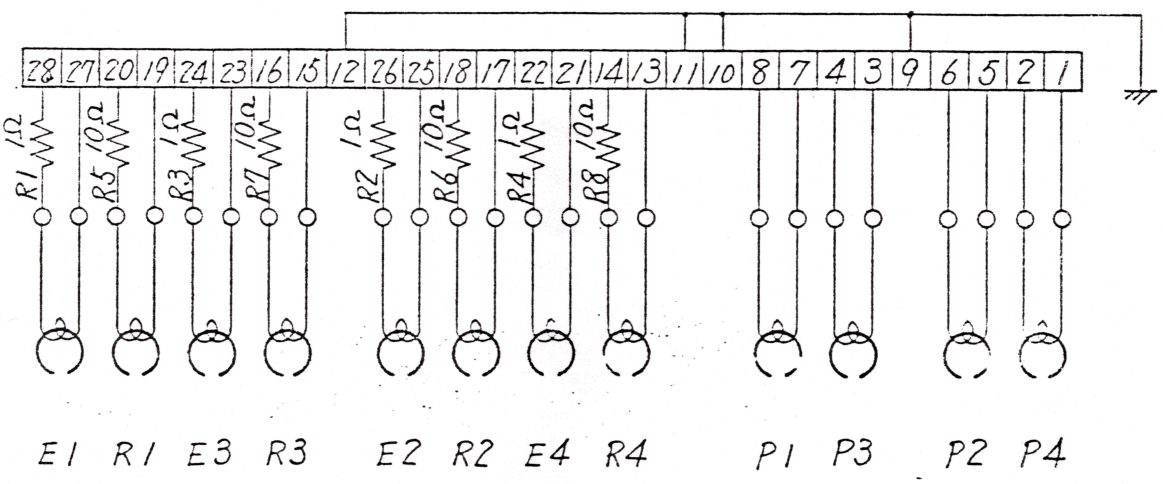

元図	生産図	取説図	TYPE
4-27526	4-28960	4-28961	

TYPE NO(A)TO
( )AT THE END

1Ω —— ½W
10Ω —— ¼W

5		. .			材料		OTARI 小谷電機株式会社
4		. .					
3		. .			仕上	指定以外のエッジはイトメのこと	形式
2		. .					
1		. .			処理		品名 HEAD PCB Ass'y
記号	改訂番号	年月日	担当	承認	普通寸法差	OS JIS 一級	図名 CONNECTION DIAGRAM
承認		検図 11 90.3.17	設計		製図 オオクマ	尺度 / 第三角法 単位 mm	品番 PB76E0A

02-37 4-77-5,000

頁 藤中

図番 4-28961